EPIC METALS CORPORATION
11 Talbot Avenue
Rankin, Pennsylvania 15104
412-351-3913
www.epicmetals.com

STEEL ROOF DECK OR FORM DECK AND DECK FASTENING SYSTEMS

CSI Sections:
05 05 23 Metal Fastening
05 31 00 Steel Decking

1.0 SCOPE OF EVALUATION

1.1 Compliance to the following codes & regulations:

- 2021, 2018, 2015, and 2012 International Building Code® (IBC)
- 2021, 2018, 2015, and 2012 International Residential Code® (IRC)
- 2022 California Building Code (CBC) – Supplement to this evaluation report
- 2022 California Residential Code (CRC) – Supplement to this evaluation report
- 2023 City of Los Angeles Building Code (LABC) – Supplement to this evaluation report
- 2023 City of Los Angeles Residential Code (LARC) – Supplement to this evaluation report

1.2 Evaluated in accordance with:

- IAPMO EC 007

1.3 Properties assessed:

- Structural

2.0 PRODUCT USE

The Epic profiled steel decks are used on horizontal and sloped roof structures. The decks comply with requirements in IBC Section 2210.1 and 2210.1.1. The deck fastening systems are used to connect components to the underside of the decks as set forth in IBC Sections 2204 and 2210. The decks and fastening systems may also be used where an engineering design is submitted in accordance with Section R301.1.3 of the IRC.

3.0 PRODUCT DESCRIPTION

3.1 Product information: The Epicore MSR decks are cold-formed from ASTM A653/A653M SS Grade 50 steel sheets, with a minimum yield strength of 50 ksi (340 MPa) and a minimum tensile strength of 60 ksi (410 MPa). The other decks are cold-formed from ASTM A653/A653M SS Grade 40 steel sheets, with a minimum yield strength of 40 ksi (275 MPa) and a minimum tensile strength of 55 ksi (380 MPa). All decks are galvanized to No. G60 minimum.

The decks are formed from No. 22 (t = 0.0295 inch [0.8 mm]), No. 20 (t = 0.0358 inch [0.9 mm]), No. 18 (t = 0.0474 inch [1.2 mm]), No. 16 (t = 0.0600 inch [1.5 mm]), or No. 14 (t = 0.0747 inch [1.9 mm]) gauge steel sheet. Section properties are summarized in Tables 1a through 1e of this report. Tolerances on delivered panel dimensions shall comply with Section 2.2 of ANSI/SDI C or ANSI/SDI RD. The deck profiles are shown in Figures 1, 2, and 5 of this report. Welds are required for connecting built-up deck sections that act as cellular or composite cellular sections. The frequency of welds (if required) is determined based on the imposed loading per project requirements in the approved plans and specifications. The panels may also be painted over the galvanized surfaces as needed per project specifications. In highly corrosive or chemical atmospheres or where reactive materials could be in contact with the steel decks, special care in specifying the finish is recommended. Fasteners exposed to weather or corrosive environments shall be corrosion-resistant or protected to prevent degradation. The members supporting the deck shall be of steel materials that comply with the requirements of AISC 360 or AISI S100.

3.1.1 Roof Deck (Non-Acoustic): Toris, Toris 4, Toris 5.5, Toris 7, Envista 4.5, Envista 6.0, Envista 7.5, SW9, SW12, SW15, ER2R, and ER3.5 are steel deck and cellular steel deck panels in various pitches, widths, and depths.

3.1.2 Roof Deck (Acoustic): Toris A, Toris 4A, Toris 5.5A, Toris 7A, Envista 4.5A, Envista 6.0A, Envista 7.5A, SW9A, SW12A, SW15A, ER2RA, and ER3.5A are steel deck and cellular steel deck panels in various pitches, widths, and depths with bottom flange perforations and acoustic media between webs for sound absorption purposes.

3.1.3 Floor Deck (Non-Acoustic): Epicore, Epicore 3.5, Epicore MSR, Toris C, and Toris 4C are steel deck panels provided with or without flute embossments in various pitches, widths, and depths.

3.1.4 Floor Deck (Acoustic): Epicore A, Epicore 3.5A, Toris CA, and Toris 4CA are steel deck panels provided with or without flute embossments in various pitches, widths, and depths.

3.2 Material Information: All Epic steel deck panels described in this report are used on horizontal, vertical, or sloped roof structures. Panels shall be placed on the steel support members and connected using welds, self-drilling

structural screws, or power-actuated fasteners. The side laps shall be connected using welds or self-drilling screws.

3.3 Connections

3.3.1 Welds (General): All welding shall be accomplished with a minimum ⅛-inch-diameter E60XX filler metal rods designated as 60 ksi (414 MPa) minimum tensile strength complying with the appropriate AWS standard. Each welder shall demonstrate an ability to produce satisfactory welds using procedures as described in ANSI/AWS D1.3.

3.3.2 Support Welds: The ¾ inch (19.1 mm) diameter arc spot welds may be used to connect the steel deck to the supporting members. Table 4 of this report provides the nominal shear strength, nominal tensile strength, and flexibility of ¾ inch (19.1 mm) diameter arc spot welds when connections are made through perforated (acoustic) material. Nominal shear strength, tensile strength, and flexibility when connections are made through solid (non-acoustic) material shall be calculated in accordance with AISI S310-20.

3.3.3 Side-Lap Welds: 1.5-inch-long (38.1 mm) fillet welds may be used at the male/female side-lap edge interface.

3.3.4 Self-Drilling Screws (General): Self-drilling screws may be used to attach the steel deck panels to supporting members and to attach the male/female side-lap.

3.3.5 Self-Drilling Screws: Self-drilling structural screws are based on Simpson Strong-Tie Strong-Drive Self-Drilling X Metal Screw or other No. 12 self-drilling screws. Table 4 of this report provides the nominal shear strength, nominal tensile strength, and flexibility of No. 12 screws when connections are made through perforated (acoustic) material. Nominal shear strength, tensile strength, and flexibility when connections are made through solid (non-acoustic) material shall be calculated in accordance with AISI S310-20.

3.3.6 Power-Actuated Fasteners (General): Power-actuated fasteners may be used to attach the steel deck panels to supporting members.

3.3.7 Power Actuated Fasteners: Power actuated fasteners are based on Hilti X-ENP-19 L15 and X-HSN 24. Table 4 of this report provides the nominal shear strength, nominal tensile strength, and flexibility of these fasteners when connections are made through perforated (acoustic) material. Nominal shear strength, tensile strength, and flexibility when connections are made through solid (non-acoustic) material shall be calculated in accordance with AISI S310-20.

3.4 Deck Underside Fastening Systems:

3.4.1 Ankore Hanger: The Ankore Hanger is a wedge-shaped steel element with a hole to accept ⅜-inch-diameter (9.5 mm) threaded steel rods, which is shown in Figure 6 of this report. Connections require the Ankore Lock Device and, optionally, the TigerBolt Rivet.

3.4.2 Wedge Bolt Hanger: The Wedge Bolt is provided with a ⅜-inch-diameter (9.5 mm) threaded shank, which accepts a coupling nut and is shown in Figure 6 of this report. Connections require the Wedge Lock Device and, optionally, the TigerBolt Rivet.

3.4.3 Ankore Lock Device: The Ankore Lock Device is formed from 0.060-inch-thick (1.5 mm), ASTM A653 Grade 40 steel with G60 galvanized coating designation. Each device is configured for a specific Epic deck profile.

3.4.4 Wedge Lock Device: The Wedge Lock Device is formed from 0.060-inch-thick (1.5 mm), ASTM A653 Grade 40 steel with G60 galvanized coating designation. Each device is configured for a specific Epic deck profile.

3.4.5 TigerBolt Rivet: The TigerBolt Rivet is a nominally 3/16-inch-diameter (4.8 mm) steel fastener with a 0.118-inch-diameter (3 mm) mandrel. The rivet has a minimum 1,000-pound tensile strength at the mandrel.

3.5 Concrete: Concrete shall comply with Chapter 19 of the IBC. Normalweight concrete (NWC) shall have a minimum 28-day specified compressive strength of 3,000 psi (20.68 MPa) or 4,000 psi ((27.58 MPa) when utilizing Epicore MSR. The design unit weight is 145 pcf (2320 kg/m^3). Lightweight concrete (LWC) with a minimum 28-day specified compressive strength of 4,000 psi (27.58 MPa) and a design unit weight of 110 pcf (1762 kg/m^3) shall be permitted when using Epicore MSR only. Admixtures containing calcium chloride, chloride from other sources, or other substances that are corrosive or otherwise deleterious to the steel deck and embedded items shall not be permitted.

4.0 DESIGN AND INSTALLATION

4.1 General

4.1.1 Deck: Design by either Allowable Strength Design (ASD) or Load and Resistance Factor Design (LRFD) shall be permitted. The registered design professional of record shall verify that imposed loads on the steel deck panels do not exceed the allowable loads contained within this report.

ASD reactions based on web crippling are shown in Tables 2a, 2b, and 2c of this report, and apply to bare deck panels, and to concrete-filled composite deck panels during the construction phase only, prior to the concrete achieving the minimum specified compressive strength. Steel floor and roof decks may resist out-of-plane loads as indicated in Tables 3.1 through 3.20 of this report. Steel floor and roof decks may resist in-plane loads as determined by AISI S310-20 and as modified for connections made through perforated (acoustic) material as listed in this report. Out-of-plane loads include inward loads due to gravity and wind, and outward loads such as wind. In-plane loads include diaphragm shear and axial compression parallel to the flutes. Support connection patterns for diaphragms shall comply with Figures 3.1 through 3.8 of this report. Deck support

attachments, side lap fastening, and perimeter attachment along edges between supports for roof deck not acting as diaphragms shall comply with ANSI/SDI RD Sections 3.1 A, B, and C, respectively.

The decks shall be anchored to resist the required net uplift forces, but not less than the following:

a. 45 pounds per square foot (2.15 kPa) for eave overhang.
b. 30 pounds per square foot (1.44 kPa) for all other roof areas.

Deflections resulting from out-of-plane load shall comply with Section 1604.3 of the IBC.

In addition to the loads specified in IBC Chapter 16, the decks shall be evaluated for strength under the following minimum construction and maintenance load combinations:

a. Allowable Strength Design

$$w_{dd} + P_{lc} \quad \text{(Eq. 1)}$$

Where:

w_{dd} = weight of steel deck
P_{lc} = concentrated construction and maintenance live load per unit width of deck section; the minimum load is 200 pounds on a 1 foot width (2.92 kN on a 1 meter width)

b. Load and Resistance Factor Design

$$1.2\, w_{dd} + 1.4\, P_{lc} \quad \text{(Eq. 2)}$$

In addition to the service loads specified in IBC Chapter 16, cantilever spans shall be evaluated for strength under the following minimum construction and maintenance load combinations:

a. Allowable Strength Design

$$w_{dd} + w_{lcc} + P_{lc} \quad \text{(Eq. 3)}$$

Where:

w_{dd} = weight of steel deck
w_{lcc} = uniform construction live load applied to cantilever span and adjacent span, minimum 10 psf (0.48 kPa)
P_{lc} = concentrated construction and maintenance live load per unit width of deck section; the minimum load is 200 pounds on a 1 foot width (2.92 kN on a 1 meter width), applied at the end of the cantilever

b. Load and Resistance Factor Design

$$1.2\, w_{dd} + 1.6\, w_{lcc} + 1.4\, P_{lc} \quad \text{(Eq. 4)}$$

The diaphragm length and width shall be limited by; 1) engineering mechanics, 2) the applied loads, 3) the shear capacity of the diaphragm, 4) the diaphragm shear deflection limited by the requirements of ASCE/SEI 7 in Sections 12.8.6 entitled, "Story Drift Determination" and Section 12.12 entitled, "Drift and Deformation". The shear web deflection is based on the stiffness or flexibility factors for the diaphragm and equations of mechanics. The shear web deflection equations of mechanics, diagrams, notations, and symbols in Attachment B of this report are an aid to designers in determining the diaphragm deflection. The total diaphragm deflection is comprised of both the flexural and shear web deflection. Beam theory may be used to determine the flexural deflection and the equations in Attachment B of this report may be used to determine the shear web deflection.

4.1.2 Composite Concrete-Filled Deck for Floors: ASD uniform load capacities and concrete depths for various span conditions using Epicore, Epicore A, Toris C, Toris CA, Epicore 3.5, Epicore 3.5A, Toris 4C, and Toris 4CA, and Epicore MSR deck are summarized in Tables 3.9 to 3.24 of this report. The maximum unshored spans for a concrete-filled deck are provided in Tables 3.25 to 3.34 for this report. In addition to the loads in accordance with ANSI/SDI C-2017 and reflected in the notes of Tables 3.25 to 3.34 of this report, the structural designer shall consider the added loads of concrete ponding resulting from deck deflection between supporting members and frame deflection. Deck support attachments, deck side lap fastening, and deck perimeter attachments along edges between supports shall comply with SDI C Sections 3.1 B, C, and D, respectively.

4.1.3 Deck Fastening Systems: ASD and LRFD Design tension (pull-out) strengths for combinations of deck profiles, with and without concrete fill are summarized in Tables 5 and 6 of this report.

Maximum fire sprinkler pipe sizes are provided in Tables 5 and 6 of this report. Sprinkler pipe installations shall comply with IBC Section 903 and NFPA 13.

4.2 Partial Panels, Openings, Holes, or Other Penetrations: Partial panels, openings, holes, or penetrations through the steel diaphragm shall be designed by a registered design professional based on principles of mechanics. For lateral force-resisting systems, the design shall consider the effects of the partial panels, openings, holes, or penetrations on the overall strength and stiffness of the diaphragm. The design calculations and opening details shall be submitted to the Building Official having jurisdiction for review and approval.

4.3 Installation

4.3.1 Steel Deck: Installation methods shall consider OSHA guidelines and are the responsibility of the contractor performing the erection work.

Installation requirements shall comply with the IBC, ANSI/SDI RD, ANSI/SDI C, ANSI/SDI QA/QC, Section 3.0, Tables 3 of this report, the manufacturer's installation

instructions, and this report. Where conflicts occur, the more restrictive shall govern.

4.3.2 Concrete: Concrete and reinforcement placement shall comply with the IBC, ACI 318, ANSI/SDI C, ANSI/SDI QA/QC, and this report. Where conflicts occur, the more restrictive shall govern.

4.3.3 Deck Fastening: Deck connections with welds and mechanical fastenings shall be in accordance with the IBC, AISI S100, AWS D1.3, ANSI SDI C, ANSI/SDI QA/QC, and Tables 2 and 3 and Figures 3 and 4 of this report. Where conflicts occur, the more restrictive shall govern.

4.3.4 Deck Underside Fastening: The deck rib opening shall be either ½ or ¾ ± $^{1}/_{16}$ inch (12.7 or 19 ± 1.6 mm) before placing the hangers. The Ankore Hanger with threaded rod or Wedge Bolt Hanger shall be inserted into the dovetail rib, rotated 90°, and pulled down to seat against the deck. After seating, the corresponding Ankore Lock or Wedge Lock device shall be inserted into the deck rib and the vertical legs shall straddle the hanger. For the Ankore Hanger, a washer and nut shall be placed to the Ankore Lock device and for the Wedge Bolt Hanger, a washer and coupling nut shall be placed to the Wedge Lock device. The nut shall be finger-tight plus one-half turn. Over-tightening is prohibited. After the hanger is loaded the nut shall be re-tightened again to finger-tight plus one-half turn as necessary.

For roof decks where rivets are required, two 3/16-inch-diameter (4.8 mm) pilot holes shall be drilled into the deck panels using the holes in the Ankore Lock or Wedge Lock device as guides. Two TigerBolt rivets shall then be installed into the pilot holes using the proper tool. Figure 9 of this report shows a typical installation with rivets.

4.4 Site Storage of Steel Deck: The Steel deck shall be stored off the ground with one end elevated to provide drainage and shall be protected from the elements with a waterproof covering, and ventilated to avoid condensation. More information on this issue is given in the SDI White Paper entitled "JOBSITE STORAGE REQUIREMENTS FOR STEEL DECK" located at www.sdi.org.

4.5 Special Inspection

4.5.1 Jobsite Welding: Periodic special inspection for welding shall be in accordance with IBC Sections 1705.2 and 1705.3. Prior to proceeding, the welder shall demonstrate the ability to produce the prescribed weld to the special inspector's satisfaction. The inspector's duties include verification of materials, weld preparation, welding procedures, and welding processes, and as otherwise indicated in ANSI/SDI QA/QC.

4.5.2 Concrete: Continuous and periodic special inspections are required for concrete construction in accordance with IBC Section 1705.3. The inspector's duties include verifying concrete mix design, sampling of fresh concrete for strength tests, performing slump and air concrete tests, measuring concrete temperature, identifying steel deck and reinforcement, inspecting steel deck and reinforcement placement, and inspecting concrete placement.

4.5.3 Wind or Seismic Force Resisting Systems: Periodic special inspections for screw connections are required where the steel deck systems are used in a seismic-force-resisting system in structures assigned to Seismic Design Category C, D, E, or F; or a wind-force resisting system in areas described in 2015 IBC Sections 1705.11 and 1705.12; or 2012 IBC Sections 1705.10 and 1705.11.

4.6 Material Traceability: Bundles marked in accordance with Section 5.0 of this report provide proof of material traceability required to conform to the requirements of Table 1705.2.2, Item 1 of the 2012 IBC, or Section 1705.2.2 of the 2015 IBC.

5.0 LIMITATIONS

The Epic Metals Steel Roof Deck or Composite Deck and Deck Underside Fastening Systems (Ankore Nuts and Wedge Bold Hangers) described in this report comply with the codes listed in Section 1.0 of this report subject to the following conditions:

5.1 The decks are manufactured, identified, and installed in accordance with this report, the approved plans, and Epic Metals published installation instructions. If there is a conflict between this report and the published installation instructions, the more restrictive governs.

5.2 Calculations and details demonstrating that the loads applied to the decks comply with this report shall be submitted to the building official for approval. The design of the connection of the deck underside fastening system to the suspended building component shall be determined in accordance with the IBC for each project. Calculations and drawings shall be prepared, signed, and sealed by a registered design professional where required by the statutes of the jurisdiction in which the project is to be constructed.

5.3 Use of the deck underside fastening systems (Ankore Nuts and Wedge Bolt Hangers) for earthquake load resistance is outside the scope of this report.

5.4 Installations of the deck fastening systems are limited to dry, interior conditions.

5.5 Special Inspections are required in accordance with Section 4.5 of this report.

5.6 Structural Observation is required in accordance with 2021, 2018, and 2015 IBC Section 1704.6, or 2012 IBC Section 1704. 5.

5.7 Where use is as diaphragms:

1. Diaphragm deflections shall not exceed the permitted relative deflections of walls between the diaphragm level and the floor below.
2. Diaphragms may be zoned by varying deck gage across a diaphragm to meet varying shear and flexibility demands.

5.8 The use of the decks as a transfer diaphragm, categorized as an out-of-plane offset vertical irregularity, in accordance with ASCE/SEI 7 Table 12.3-1(4), within a seismic force-resisting system, is beyond the scope of this report.

5.9 Where the decks are used as a diaphragm, the spacing of fasteners along longitudinal edges parallel to the deck flutes shall be no greater than the interior side-lap seam fastener spacing.

5.10 Where the deck is used as a diaphragm with a combination of connection types, the more severe factor for design strength in Table B1.1 of AISI S310-20 shall be used.

5.11 The use of steel deck for vertical diaphragms (shear walls) is beyond the scope of this report.

5.12 Fatigue (cyclic) loads, point loads, line loads, fire-resistance ratings, and acoustical performance are beyond the scope of this report.

5.13 When applicable, the registered design professional shall submit calculations to the building official for approval that justifies the deck to supporting member connections that are capable of transferring the wind uplift loads.

5.14 Deck underside fastenings used to support fire sprinkler systems shall comply with the pipe size limitations in Tables 5 and 6 of this report.

6.0 SUBSTANTIATING DATA

6.1 Data in accordance with IAPMO-ES Evaluation Criteria for Steel Composite, Non-Composite, and Roof Deck Construction, EC 007, adopted April 2021, including data in accordance with AISI S100 and AISI S905

6.2 Data in accordance with Underwriters Laboratories Standard 203.

6.3 Test results are from laboratories in compliance with ISO/IEC 17025.

7.0 IDENTIFICATION

The product is to be identified with a visible label on each bundle of panels. The label includes the name and address of the manufacturer, ASTM steel specification, steel gage, the model number, and the evaluation report number (ER-226). Either IAPMO UES Mark of Conformity may also be used as shown below:

IAPMO ES ® or UES ®

IAPMO UES ER-226

For additional information about this evaluation report please visit www.uniform-es.org or email at info@uniform-es.org

ATTACHMENT B

Diaphragm Shear Web Deflection Equations

Type of Loading	Loading Condition	Shear Deflection	
Simple Beam at Center	Uniform Load, w	$\Delta_w = \frac{wL^2}{8bG'}$	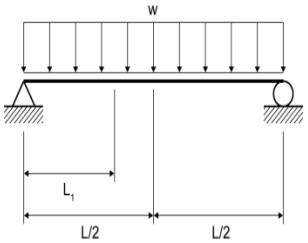
Simple Beam at L_1	Uniform Load, w	$\Delta_w = \frac{q_{ave}L_1}{G'}$	
Simple Beam at center	Point Load, P	$\Delta_w = \frac{PL}{4bG'}$	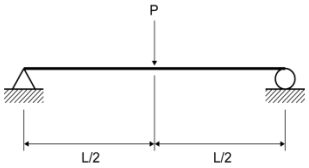
Simple Beam at 1/3 points	Point Loads, P	$\Delta_w = \frac{PL}{3bG'}$	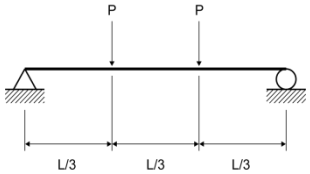
Cantilever Beam at End	Uniform Load, w	$\Delta_w = \frac{PL^2}{2bG'}$	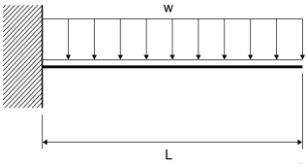
Cantilever Beam at End	Point Load, P	$\Delta_w = \frac{PL}{bG'}$	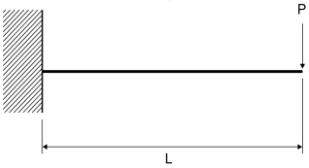
Relationship between flexibility factor and stiffness factor		$f = \frac{1000}{G'}$	

b = Depth of diaphragm (ft)

f = Flexibility factor (micro in/lbs)

G' = Stiffness factor (kips/in)

L = Diaphragm Length (ft)

L_1 = Distance to point were deflection is calculated (ft)

P = Concentrated load (lbs)

q_{ave} = Average diaphragm shear (lbs/ft)

w = Uniform load (lbs/ft)

Δ_w = Web deflection (in)

TABLE 1A – Roof Deck Section Properties
For Toris, Toris A, Toris 4, Toris 4A, Toris 5.5, Toris 5.5A, Toris 7, & Toris 7A[1]

Deck Type	Base Metal Thickness (in.)	Weight (psf)	Area (in^2/ft)	Moment of Inertia (in^4/ft)	Section Modulus (in^3/ft)	
					Positive	Negative
				I_D	S_P	S_N
Toris - 20	0.0358	2.8	0.83	0.77	0.48	0.44
Toris A - 20		2.7	0.79	0.73	0.47	0.42
Toris - 18	0.0474	3.7	1.10	1.03	0.64	0.60
Toris A - 18		3.6	1.06	0.98	0.63	0.58
Toris - 16	0.0600	4.7	1.39	1.31	0.81	0.78
Toris A - 16		4.6	1.32	1.25	0.80	0.76
Toris 4 - 20	0.0358	3.4	0.98	2.53	0.77	0.82
Toris 4A - 20		3.3	0.94	2.38	0.75	0.77
Toris 4 - 18	0.0474	4.4	1.30	3.42	1.24	1.24
Toris 4A - 18		4.3	1.25	3.21	1.22	1.17
Toris 4 - 16	0.0600	5.6	1.65	4.36	1.66	1.66
Toris 4A - 16		5.5	1.58	4.10	1.63	1.56
Toris 5.5 - 20/20	0.0358/0.0358	5.2	1.53	6.08	1.68	1.30
Toris 5.5A - 20/20		5.1	1.47	5.72	1.65	1.22
Toris 5.5 - 18/18	0.0474/0.0474	6.9	2.03	8.35	2.45	1.98
Toris 5.5A - 18/18		6.8	1.95	7.85	2.40	1.56
Toris 5.5 - 16/16	0.0600/0.0600	8.8	2.58	10.93	3.33	2.77
Toris 5.5A - 16/16		8.7	2.48	10.27	3.26	2.60
Toris 7 - 20/20	.00358/0.0358	5.7	1.68	10.68	2.36	1.77
Toris 7A - 20/20		5.6	1.61	10.04	2.31	1.66
Toris 7 - 18/18	0.0474/0.0474	7.6	2.23	14.71	3.56	2.75
Toris 7A - 18/18		7.5	2.14	13.83	3.49	2.59
Toris 7 - 16/16	0.0600/0.0600	9.6	2.82	18.94	4.92	3.91
Toris 7A - 16/16		9.5	2.71	17.80	4.82	3.68

FOR SI: 1 ksi = 6.89 MPa, 1 psf = 0.0479 kN/m^2, 1 inch = 25.4 mm, 1 foot = 304.8 mm, 1 in^2/foot = 59.27 mm^2/m, 1 in^4/ft = 1365589 mm^4/m, 1 in^3/ft = 53763 mm^3/m

[1] Values based on a steel yield strength of 40,000 psi.

TABLE 1B – Composite Deck Section Properties
For Toris C, Toris CA, Toris 4C, & Toris 4CA[1]

Deck Type	Base Metal Thickness (in.)	Weight (psf)	Area (in^2/ft)	Moment of Inertia (in^4/ft)	Section Modulus (in^3/ft)	
					Positive	Negative
				I_D	S_P	S_N
Toris C - 20	0.0358	2.8	0.83	0.77	0.48	0.44
Toris CA - 20		4.3	1.26	0.99	0.64	0.46
Toris C - 18	0.0474	3.7	1.10	1.03	0.64	0.60
Toris CA - 18		5.2	1.52	1.24	0.81	0.61
Toris C - 16	0.0600	4.7	1.39	1.31	0.81	0.78
Toris CA - 16		6.1	1.80	1.51	0.99	0.78
Toris 4C - 20	0.0358	3.4	0.98	2.53	0.77	0.82
Toris 4CA - 20		4.7	1.39	2.67	0.88	0.98
Toris 4C - 18	0.0474	4.4	1.30	3.42	1.24	1.24
Toris 4CA - 18		5.8	1.70	3.50	1.32	1.29
Toris 4C - 16	0.0600	5.6	1.65	4.36	1.66	1.66
Toris 4CA - 16		6.9	2.03	4.40	1.73	1.64

FOR SI: 1 ksi = 6.89 MPa, 1 psf = 0.0479 kN/m^2, 1 inch = 25.4 mm, 1 foot = 304.8 mm, 1 in^2/foot = 59.27 mm^2/m, 1 in^4/ft = 1365589 mm^4/m, 1 in^3/ft = 53763 mm^3/m

[1] Values based on a steel yield strength of 40,000 psi.

TABLE 1C – Roof Deck Section Properties
For SW9, SW9A, SW12, SW12A, SW15, SW15 A
Envista 4.5, Envista 4.5A Envista 6.0, Envista 6.0A, Envista 7.5, & Envista 7.5A[1]

Deck Type	Base Metal Thickness (in.)	Weight (psf)	Area (in^2/ft)	Moment of Inertia (in^4/ft)	Section Modulus (in^3/ft)	
					Positive	Negative
				I_D	S_P	S_N
SW9 - 18/18	0.0474/0.0474	6.3	1.84	20.63	3.12	2.12
SW9A - 18/18		6.2	1.77	19.39	3.06	1.99
SW9 - 16/16	0.0600/0.0600	7.9	2.33	27.38	4.45	3.01
SW9A - 16/16		7.8	2.24	25.74	4.36	2.83
SW9 - 14/14	0.0747/0.0747	9.9	2.92	34.98	6.11	4.16
SW9A - 14/14		9.8	2.80	32.88	5.99	3.91
SW12 - 18/18	0.0474/0.0474	6.9	2.03	38.22	4.20	3.06
SW12A - 18/18		6.8	1.95	35.93	4.12	2.88
SW12 - 16/16	0.0600/0.0600	8.8	2.57	51.33	6.16	4.36
SW12A - 16/16		8.7	2.47	48.25	6.04	4.10
SW12 - 14/14	0.0747/0.0747	10.9	3.22	66.44	8.47	6.09
SW12A - 14/14		10.8	3.09	62.45	8.30	5.72
SW15 - 18/18	0.0474/0.0474	7.5	2.22	61.93	5.29	3.94
SW15A - 18/18		7.4	2.13	58.21	5.18	3.70
SW15 - 16/16	0.0600/0.0600	9.6	2.81	83.45	7.81	5.62
SW15A - 16/16		9.5	2.70	78.44	7.65	5.28
SW15 - 14/14	0.0747/0.0747	12.0	3.51	108.42	10.83	7.86
SW15A - 14/14		11.9	3.37	101.91	10.61	7.39
Envista 4.5 - 18	0.0474	3.4	1.00	2.86	0.99	1.06
Envista 4.5A - 18		3.3				
Envista 4.5 - 16	0.0600	4.3	1.27	3.78	1.28	1.34
Envista 4.5A - 16		4.2				
Envista 4.5 - 14	0.0747	4.0	1.58	4.84	1.62	1.68
Envista 4.5A - 14		3.9				
Envista 6.0 - 18	0.0474	3.7	1.09	5.61	1.49	1.46
Envista 6.0A - 18		3.6				
Envista 6.0 - 16	0.0600	4.7	1.39	7.47	1.94	2.03
Envista 6.0A - 16		4.6				
Envista 6.0 - 14	0.0747	5.9	1.73	9.56	2.46	2.54
Envista 6.0A - 14		5.8				
Envista 7.5 - 18	0.0474	4.0	1.19	9.44	2.04	1.91
Envista 7.5A - 18		3.9				
Envista 7.5 - 16	0.0600	5.1	1.51	12.61	2.67	2.53
Envista 7.5A - 16		5.0				
Envista 7.5 - 14	0.0747	6.4	1.88	16.18	3.40	3.31
Envista 7.5A - 14		6.3				

FOR SI: 1 ksi = 6.89 MPa, 1 psf = 0.0479 kN/m^2, 1 inch = 25.4 mm, 1 foot = 304.8 mm, 1 in^2/foot = 59.27 mm^2/m, 1 in^4/ft = 1365589 mm^4/m, 1 in^3/ft = 53763 mm^3/m

[1] Values based on a steel yield strength of 40,000 psi.

TABLE 1D – Roof Deck Section Properties
For ER2R, ER2RA, ER3.5, ER3.5A, ER5, ER5A, ER6.5, & ER6.5A[1]

Deck Type	Base Metal Thickness (in.)	Weight (psf)	Area (in^2/ft)	Moment of Inertia (in^4/ft)	Section Modulus (in^3/ft)	
					Positive	Negative
				I_D	S_P	S_N
ER2R - 22	0.0295	2.2	0.65	0.38	0.27	0.25
ER2RA - 22		2.1	0.61	0.36	0.26	0.24
ER2R - 20	0.0358	2.7	0.79	0.47	0.34	0.31
ER2RA - 20		2.5	0.74	0.44	0.33	0.29
ER2R - 18	0.0474	3.6	1.04	0.63	0.47	0.43
ER2RA - 18		3.4	0.99	0.59	0.46	0.40
ER2R - 16	0.0600	4.5	1.33	0.79	0.59	0.57
ER2RA - 16		4.3	1.25	0.74	0.58	0.54
ER3.5 - 20	0.0358	3.2	0.95	1.84	0.69	0.81
ER3.5A - 20		3.1	0.90	1.73	0.68	0.76
ER3.5 - 18	0.0474	4.3	1.26	2.50	1.01	1.10
ER3.5A - 18		4.1	1.19	2.35	0.99	1.03
ER3.5 - 16	0.0600	5.4	1.59	3.18	1.36	1.41
ER3.5A - 16		5.1	1.51	2.99	1.33	1.33

FOR SI: 1 ksi = 6.89 MPa, 1 psf = 0.0479 kN/m^2, 1 inch = 25.4 mm, 1 foot = 304.8 mm, 1 in^2/foot = 59.27 mm^2/m, 1 in^4/ft = 1365589 mm^4/m, 1 in^3/ft = 53763 mm^3/m

[1] Values based on a steel yield strength of 40,000 psi.

TABLE 1E - Composite Deck Section Properties
For Epicore MSR, Epicore, Epicore A, Epicore 3.5, & Epicore 3.5A[1]

Deck Type	Base Metal Thickness (in.)	Weight (psf)	Area (in^2/ft)	Moment of Inertia (in^4/ft)	Section Modulus (in^3/ft)	
					Positive	Negative
				I_D	S_P	S_N
Epicore MSR-22	0.0295	2.0	0.58	0.26	0.18	0.16
Epicore MSR-20	0.0358	2.4	0.70	0.32	0.23	0.20
Epicore - 22	0.0295	2.2	0.65	0.38	0.27	0.25
Epicore - 20	0.0358	2.7	0.79	0.47	0.34	0.31
Epicore A - 20		4.2	1.22	0.63	0.46	0.33
Epciore - 18	0.0474	3.6	1.04	0.63	0.47	0.43
Epicore A - 18		5.0	1.47	0.77	0.59	0.44
Epicore - 16	0.0600	4.5	1.33	0.79	0.59	0.57
Epicore A - 16		5.9	1.73	0.93	0.71	0.56
Epicore 3.5- 20	0.0358	3.2	0.95	1.84	0.69	0.81
Epicore 3.5A - 20		4.6	1.36	2.04	0.75	0.83
Epicore 3.5 - 18	0.0474	4.3	1.26	2.50	1.01	1.10
Epicore 3.5A - 18		5.6	1.66	2.66	1.08	1.09
Epicore 3.5 - 16	0.0600	5.4	1.59	3.18	1.36	1.41
Epicore 3.5A - 16		6.7	1.97	3.30	1.42	1.38

FOR SI: 1 ksi = 6.89 MPa, 1 psf = 0.0479 kN/m^2, 1 inch = 25.4 mm, 1 foot = 304.8 mm, 1 in^2/foot = 59.27 mm^2/m, 1 in^4/ft = 1365589 mm^4/m, 1 in^3/ft = 53763 mm^3/m

[1] Values for Epicore MSR are based on a steel yield strength of 50,000 psi. The values for all other deck types are based on a steel yieldstrength of 40,000 psi.

TABLE 2A - Allowable End and Interior Reactions Based on Web Crippling For Toris, Toris A, Toris C, Toris CA, Toris 4, Toris 4A, Toris 4C, Toris 4CA, Toris 5.5, Toris 5.5A, Toris 7, & Toris 7A[1,2]

Deck Type	Base Metal Thickness (in.)	Allowable Reactions (plf)							
		End Bearing Length (in.)				Interior Bearing Length (in.)			
		1	1.5	2	3	3	4	5	6
Toris-20 Toris A-20 Toris C-20 Toris CA-20	0.0358	842	950	1041	1193	1922	2103	2262	2406
Toris-18 Toris A-18 Toris C-18 Toris CA-18	0.0474	1413	1583	1726	1966	3176	3458	3707	3932
Toris-16 Toris A-16 Toris C-16 Toris CA-16	0.0600	2181	2429	2637	2987	4843	5252	5612	5938
Toris 4-20 Toris 4A-20 Toris 4C-20 Toris 4CA-20	0.0358	566	639	700	803	1378	1507	1622	1725
Toris 4-18 Toris 4A-18 Toris 4C-18 Toris 4CA-18	0.0474	965	1081	1179	1343	2287	2491	2670	2832
Toris 4-16 Toris 4A-16 Toris 4C-16 Toris 4CA-16	0.0600	1506	1676	1820	2062	3500	3796	4056	4292
Toris 5.5-20/20 Toris 5.5A-20/20	0.0358/0.0358	566	639	700	803	1378	1507	1622	1725
Toris 5.5-18/18 Toris 5.5A-18/18	0.0474/0.0474	965	1081	1179	1343	2287	2491	2670	2832
Toris 5.5-16/16 Toris 5.5A-16/16	0.0600/0.0600	1506	1676	1820	2062	3500	3796	4056	4292
Toris 7-20/20 Toris 7A-20/20	0.0358/0.0358	566	639	700	803	1378	1507	1622	1725
Toris 7-18/18 Toris 7A-18/18	0.0474/0.0474	965	1081	1179	1343	2287	2491	2670	2832
Toris 7-16/16 Toris 7A-16/16	0.0600/0.0600	1506	1676	1820	2062	3500	3796	4056	4292

FOR SI: 1 ksi = 6.89 MPa, 1 inch = 25.4 mm, 1 plf = 14.59 N/m

1. Values based on a steel yield strength of 40,000 psi.
2. Based on ASD design.

TABLE 2B - Allowable End and Interior Reactions Based on Web Crippling For SW9, SW9A, SW12, SW12A, SW15, SW15A, Envista 4.5, Envista 4.5A, Envista 6.0, Envista 6.0A, Envista 7.5, & Envista 7.5A[1,2]

Deck Type	Base Metal Thickness (in.)	Allowable Reactions (plf)								
		End Bearing Length (in.)					Interior Bearing Length (in.)			
		2	3	4	5	6	3	4	5	6
SW9-18/18 SW9A-/18/18	0.0474/0.0474	527	600	662	716	766	1036	1128	1209	1283
SW9-16/16 SW9A-16/16	0.0600/0.0600	820	929	1021	1102	1175	1595	1729	1848	1955
SW9-14/14 SW9A-14/14	0.0747/0.0747	1235	13191	1523	1639	1744	2382	2573	2741	2893
SW12-18/18 SW12A-18/18	0.0474/0.0474	501	571	629	681	728	1034	1122	1203	1276
SW12-16/16 SW12A-16/16	0.0600/0.0600	785	890	978	1055	1125	1587	1721	1839	1946
SW12-14/14 SW12A-14/14	0.0747/0.0747	1189	1340	1467	1579	1680	2372	2562	2730	2881
SW15-18/18 SW15A-18/18	0.0474/0.0474	478	544	600	650	694	1025	1116	1197	1269
SW15-16/16 SW15A-16/16	0.0600/0.0600	754	855	939	1013	1081	1580	1713	1831	1937
SW15-14/14 SW15A-14/14	0.0747/0.0747	1149	1294	1417	1525	1623	2362	2552	2719	2870
Envista 4.5-18 Envista4.5A-18	0.0474	527	600	662	716	766	1036	1128	1209	1283
Envista 4.5-16 Envista 4.5A-16	0.0600	820	929	1021	1102	1175	1595	1729	1848	1955
Envista 4.5-14 Envista 4.5A-14	0.0747	1235	13191	1523	1639	1744	2382	2573	2741	2893
Envista 6.0-18 Envista 6.0A-18	0.0474	501	571	629	681	728	1034	1122	1203	1276
Envista 6.0-16 Envista 6.0A-16	0.0600	785	890	978	1055	1125	1587	1721	1839	1946
Envista 6.0-14 Envista 6.0A-14	0.0747	1189	1340	1467	1579	1680	2372	2562	2730	2881
Envista 7.5-18 Envista 7.5A-18	0.0474	478	544	600	650	694	1025	1116	1197	1269
Envista 7.5-16 Envista 7.5A-16	0.0600	754	855	939	1013	1081	1580	1713	1831	1937
Envista 7.5-14 Envista 7.5A-14	0.0747	1149	1294	1417	1525	1623	2362	2552	2719	2870

FOR SI: 1 ksi = 6.89 MPa, 1 inch = 25.4 mm, 1 plf = 14.59 N/m

1. Values based on a steel yield strength of 40,000 psi.
2. Based on ASD design.

TABLE 2C - Allowable End and Interior Reactions Based on Web Crippling For Epicore MSR, ER2R, ER2RA, Epicore, Epicore A, ER3.5, ER3.5A, Epicore 3.5, & Epicore 3.5A[1,2]

Deck Type	Base Metal Thickness (in.)	Allowable Reactions (plf)							
		End Bearing Length (in.)				Interior Bearing Length (in.)			
		1	1.5	2	3	3	4	5	6
Epicore MSR-22	0.0295	522	591	650	748	1184	1300	1401	-
Epicore MSR-20	0.0358	749	844	925	1061	1683	1842	1982	-
ER2R-22 ER2RA-22 Epicore A-22	0.0295	590	668	734	846	1383	1518	1637	-
ER2R-20 ER2RA-20 Epicore-20 Epicore A-20	0.0358	843	951	1042	1195	1952	2136	2298	-
ER2R-18 ER2RA-18 Epicore-18 Epicore A-18	0.0474	1415	1585	1728	1969	3218	3504	3756	-
ER2R-16 ER2RA-16 Epicore-16 Epicore A-16	0.0600	2183	2431	2640	2990	4897	5311	5675	-
ER3.5-20 ER3.5A-20 Epicore 3.5-20 Epicore 3.5A-20	0.0358	568	641	702	805	1379	1509	1623	1727
ER3.5-18 ER3.5A-18 Epicore 3.5-18 Epicore 3.5A-18	0.0474	969	1085	1183	1348	2293	2497	2676	2839
ER3.5-16 ER3.5A-16 Epicore 3.5-16 Epicore 3.5A-16	0.0600	1512	1684	1829	2072	3515	3811	4073	4309

FOR SI: 1 ksi = 6.89 MPa, 1 inch = 25.4 mm, 1 plf = 14.59 N/m

1. Epicore MSR values are based on a steel yield strength of 50,000 psi. The values for all other deck types are based on a steel yieldstrength of 40,000 psi.
2. Based on ASD design.

TABLE 3.1 - TORIS & TORIS A ALLOWABLE UNIFORM LOAD TABLES (psf)

TORIS

Span Condition	Gage	Design Thick. (in)	Span Length Center to Center of Supports (ft-in)														
			6-0	6-6	7-0	7-6	8-0	9-0	10-0	11-0	12-0	13-0	14-0	15-0	16-0	17-0	18-0
1	20	0.0358	212 / 235	181 / 185	156 / 148	136 / 120	119 / 99	94 / 70	76 / 51	63 / 38	53 / 29	-	-	-	-	-	-
	18	0.0474	284 / 315	242 / 247	209 / 198	182 / 161	160 / 133	126 / 93	102 / 68	85 / 51	71 / 39	61 / 31	52 / 25	-	-	-	-
	16	0.0600	361 / 398	308 / 313	265 / 251	231 / 204	203 / 168	160 / 118	130 / 86	107 / 65	90 / 50	77 / 39	66 / 31	58 / 25	-	-	-
2	20	0.0358	195 / 566	321 / 445	143 / 356	125 / 290	110 / 239	87 / 168	70 / 122	58 / 92	49 / 71	41 / 56	36 / 45	31 / 36	27 / 28	-	-
	18	0.0474	267 / 757	228 / 596	196 / 477	171 / 388	150 / 320	119 / 224	96 / 164	79 / 123	67 / 95	57 / 74	49 / 60	43 / 48	38 / 37	33 / 29	-
	16	0.0600	348 / 959	296 / 754	255 / 604	222 / 491	196 / 404	154 / 284	125 / 207	103 / 156	87 / 120	74 / 94	64 / 75	56 / 61	49 / 47	43 / 37	39 / 30
3 or more	20	0.0358	243 / 443	207 / 348	179 / 279	156 / 227	137/ 187	108 / 131	88 / 96	72 / 72	61 / 55	52 / 44	45 / 35	39 / 28	-	-	-
	18	0.0474	334 / 593	284 / 466	245 / 373	214 / 303	188 / 250	148 / 176	120 / 128	99 / 96	83 / 74	71 / 58	61 / 47	53 / 38	47 / 29	-	-
	16	0.0600	434 / 750	370 / 590	319 / 472	278 / 384	244 / 317	193 / 222	156 / 162	129 / 122	109 / 94	93 / 74	80 / 59	70 / 48	61 / 37	54 / 29	-

TORIS A

Span Condition	Gage	Design Thick. (in)	Span Length Center to Center of Supports (ft-in)														
			6-0	6-6	7-0	7-6	8-0	9-0	10-0	11-0	12-0	13-0	14-0	15-0	16-0	17-0	18-0
1	20	0.0358	208 / 223	177 / 175	152 / 141	133 / 114	117 / 94	92 / 66	75 / 48	62 / 36	52 / 28	-	-	-	-	-	-
	18	0.0474	279 / 299	237 / 235	205 / 188	178 / 153	157 / 126	124 / 89	100 / 65	83 / 48	70 / 37	59 / 29	-	-	-	-	-
	16	0.0600	354 /378	301 / 298	260 / 238	226 / 194	199 / 160	157 / 112	127 / 82	105 / 61	88 / 47	75 / 37	65 / 30	57 / 24	-	-	-
2	20	0.0358	188 / 537	160 / 422	138 / 338	120 / 275	106 / 227	84 / 159	68 / 116	56 / 87	47 / 67	40 / 53	35 / 42	30 / 34	26 / 27	-	-
	18	0.0474	258 / 719	220 / 566	189 / 453	165 / 368	145 / 303	115 / 213	93 / 155	77 / 117	64 / 90	55 / 71	47 / 57	41 / 46	36 / 36	32 / 28	-
	16	0.0600	336 / 911	286 / 717	247 / 574	215 / 466	189 / 384	149 / 270	121 / 197	100 / 148	84 / 114	71 / 90	62 / 72	54 / 58	47 / 45	42 / 35	37 / 28
3 or more	20	0.0358	235 / 420	200 / 331	173 / 265	150 / 215	132 / 177	104 / 125	85 / 91	70 / 68	59 / 53	50 / 41	43 / 33	38 / 27	-	-	-
	18	0.0474	322 / 563	275 / 443	237 / 355	206 / 288	181 / 238	143 / 167	116 / 122	96 / 91	81 / 70	69 / 55	59 / 44	52 /36	45 / 28	-	-
	16	0.0600	419 / 713	357 / 561	308 / 449	268 / 365	236 / 301	186 / 211	151 / 154	125 / 116	105 / 89	89 / 70	77 / 56	67 / 46	59 / 35	52 / 28	-

SI Conversions: 1 inch = 25.4mm; 1 foot = 305mm; 1psf = 47.88 Pa

Notes:
1. Table 3.1 assumes that all loading is uniform.
2. Loads are based on ASD Design.
3. Uniform load values listed on the left side of the box, 100 / 75 , are goverened by stress and the values listed on the right side, 100 / **75** , are governed by deflection.
4. The deflection criteria used for generating the tables above were L/240 or 0.75" maximum. The registered design professional shall calculate the allowable uniform load if a different defleciton criteria is required.
5. Stress goverened values assume a maximum allowable stress of 24 ksi.
6. The above tables assume the minimum end bearing length is 1.5" and the minimum interior bearing length is 3".

TABLE 3.2 - TORIS 4 & TORIS 4A ALLOWABLE UNIFORM LOAD TABLES (psf)

TORIS 4

Span Condition	Gage	Design Thick. (in)	Span Length Center to Center of Supports (ft-in)														
			12-0	13-0	14-0	15-0	16-0	17-0	18-0	19-0	20-0	21-0	22-0	23-0	24-0	25-0	26-0
1	20	0.0358	86 / 96	73 / 76	63 / 61	55 / 49	48 / 41	43 / 34	38 / 28	34 / 24	31 / 21	-	-	-	-	-	-
	18	0.0474	138 / 130	117 / 102	101 / 82	88 / 67	78 / 55	69 / 46	61 / 39	55 / 33	50 / 28	45 / 23	-	-	-	-	-
	16	0.0600	184 / 166	157 / 130	136 / 104	118 / 85	104 / 70	92 / 58	82 / 49	74 / 42	66 / 36	60 / 29	55 / 24	50 / 20	-	-	-
2	20	0.0358	91 / 231	78 / 182	67 / 146	58 / 118	51 / 98	45 / 81	40 / 69	36 / 58	33 / 50	30 / 41	27 / 34	25 / 29	23 / 24	21 / 20	-
	18	0.0474	138 / 313	117 / 246	101 / 197	88 / 160	78 / 132	69 / 110	61 / 93	55 / 79	50 / 68	45 / 56	41 / 46	38 / 39	34 / 33	32 / 28	29 / 24
	16	0.0600	184 / 399	157 / 314	136 / 251	118 / 204	104 / 168	92 / 140	82 / 118	74 / 100	66 / 86	60 / 71	55 / 59	50 / 49	46 / 42	42 / 35	39 / 30

TORIS 4A

Span Condition	Gage	Design Thick. (in)	Span Length Center to Center of Supports (ft-in)														
			12-0	13-0	14-0	15-0	16-0	17-0	18-0	19-0	20-0	21-0	22-0	23-0	24-0	25-0	26-0
1	20	0.0358	83 / 90	71 / 71	61 / 57	53 / 46	47 / 38	42 / 32	37 / 27	33 / 23	30 / 20	-	-	-	-	-	-
	18	0.0474	136 / 122	116 / 96	100 / 77	87 / 62	76 / 51	68 / 43	60 / 36	54 / 31	49 / 26	44 / 22	-	-	-	-	-
	16	0.0600	181 / 156	154 / 123	133 / 98	116 / 80	102 / 66	90 / 55	80 / 46	72 / 39	65 / 34	59 / 28	54 / 23	-	-	-	-
2	20	0.0358	86 / 218	73 / 171	63 / 137	55 / 111	48 / 92	43 / 77	38 / 65	34 / 55	31 / 47	28 / 39	25 / 32	23 / 27	21 / 23	-	-
	18	0.0474	130 / 294	111 / 231	96 / 185	83 / 150	73 / 124	65 / 103	58 / 87	52 / 74	47 / 63	42 / 52	39 / 43	35 / 36	33 / 31	30 / 26	28 / 22
	16	0.0600	173 / 375	148 / 295	127 / 236	111 / 192	98 / 158	86 / 132	77 / 111	69 / 94	62 / 81	57 / 67	52 / 55	47 / 46	43 / 39	40 / 33	37 / 28

SI Conversions: 1 inch = 25.4mm; 1 foot = 305mm; 1psf = 47.88 Pa

Notes:
1. Table 3.2 assumes that all loading is uniform.
2. Loads are based on ASD Design.
3. Uniform load values listed on the left side of the box, 100 / 75 , are goverened by stress and the values listed on the right side, 100 / **75** are governed by deflection.
4. The deflection criteria used for generating the tables above were L/240 or 1" maximum. The registered design professional shall calculate the allowable uniform load if a different defleciton criteria is required.
5. Stress goverened values assume a maximum allowable stress of 24 ksi.
6. The above tables assume a minimum end bearing length is 2" and a minimum interior bearing length is 4".

TABLE 3.3 - TORIS 5.5, TORIS 5.5A, TORIS 7 & TORIS 7A ALLOWABLE UNIFORM LOAD TABLES (psf)

TORIS 5.5

Span Condition	Gage	Design Thickness (in)	Span Length Center to Center of Supports (ft-in)													
			13-0	14-0	15-0	16-0	17-0	18-0	19-0	20-0	21-0	22-0	23-0	24-0	25-0	26-0
1	20/20	0.0358/0.0358	124 / 182	115 / 145	107 / 118	100 / 97	93 / 81	83 / 68	74 / 58	67 / 50	61 / 41	56 / 34	51 / 29	47 / 24	43 / 20	-
	18/18	0.0474/0.0474	207 / 250	192 / 200	174 / 162	153 / 134	136 / 112	121 / 94	109 / 80	98 / 69	89 / 56	81 / 47	74 / 39	68 / 33	63 / 28	58 / 24
	16/16	0.0600/0.0600	315 / 327	272 / 262	237 / 213	208 / 175	184 / 146	164 / 123	148 / 105	133 / 90	121 / 74	110 / 61	101 / 51	93 / 43	85 / 37	79 / 31

TORIS 5.5A

Span Condition	Gage	Design Thickness (in)	Span Length Center to Center of Supports (ft-in)													
			13-0	14-0	15-0	16-0	17-0	18-0	19-0	20-0	21-0	22-0	23-0	24-0	25-0	26-0
1	20/20	0.0358/0.0358	124 / 171	115 / 137	107 / 111	100 / 92	91 / 76	81 / 64	73 / 55	66 / 47	60 / 39	55 / 32	50 / 27	46 / 23	-	-
	18/18	0.0474/0.0474	207 / 235	192 / 188	171 / 153	150 / 126	133 / 105	119 / 88	106 / 75	96 / 64	87 / 53	79 / 44	73 / 37	67 / 31	61 / 26	57 / 23
	16/16	0.0600/0.0600	309 / 307	266 / 246	232 / 200	204 / 165	180 / 137	161 / 116	144 / 98	130 / 84	118 / 69	108 / 58	99 / 48	91 / 41	83 / 35	77 / 30

TORIS 7

Span Condition	Gage	Design Thickness (in)	Span Length Center to Center of Supports (ft-in)													
			16-0	17-0	18-0	19-0	20-0	21-0	22-0	23-0	24-0	25-0	26-0	27-0	28-0	29-0
1	20/20	0.0358/0.0358	100 / 171	94 / 143	89 / 120	85 / 102	80 / 88	76 / 72	73 / 60	70 / 50	66 / 42	60 / 36	56 / 31	52 / 26	48 / 23	45 / 20
	18/18	0.0474/0.0474	168 / 236	158 / 197	149 / 166	141 / 141	134 / 121	128 / 99	118 / 82	108 / 69	99 / 58	91 / 49	84 / 42	78 / 36	73 / 31	68 / 27
	16/16	0.0600/0.0600	258 / 304	243 / 253	229 / 213	217 / 181	197 / 155	179 / 128	163 / 106	149 / 89	137 / 75	126 / 64	116 / 54	108 / 47	100 / 40	94 / 35

TORIS 7A

Span Condition	Gage	Design Thickness (in)	Span Length Center to Center of Supports (ft-in)													
			16-0	17-0	18-0	19-0	20-0	21-0	22-0	23-0	24-0	25-0	26-0	27-0	28-0	29-0
1	20/20	0.0358/0.0358	100 / 161	94 / 134	89 / 113	85 / 96	80 / 82	76 / 68	73 / 56	70 / 47	64 / 40	59 / 34	55 / 29	51 / 25	47 / 21	-
	18/18	0.0474/0.0474	168 / 222	158 / 185	149 / 156	141 / 132	134 / 114	127 / 93	115 / 78	106 / 65	97 / 55	89 / 46	83 / 40	77 / 34	71 / 30	66 / 26
	16/16	0.0600/0.0600	258 / 285	243 / 238	229 / 200	214 / 170	193 / 146	175 / 120	159 / 100	146 / 84	134 / 70	123 / 60	114 / 51	106 / 44	98 / 38	92 / 33

SI Conversions: 1 inch = 25.4mm; 1 foot = 305mm; 1psf = 47.88 Pa

Notes:
1. Table 3.3 assumes that all loading is uniform.
2. Loads are based on ASD Design.
3. Uniform load values listed on the left side of the box, 100 / 75 , are goverened by stress and the values listed on the right side, 100 / **75**, are governed by deflection.
4. The deflection criteria used for generating the tables above were L/240 or 1" maximum. The registered design professional shall calculate the allowable uniform load if a different defleciton criteria is required.
5. Stress goverened values assume a maximum allowable stress of 24 ksi.
6. The above tables assume the minimum end bearing length is 3".

TABLE 3.4 - SW9, SW9A, SW12 & SW12A ALLOWABLE UNIFORM LOAD TABLES (psf)

SW9

Span Condition	Gage	Design Thickness (in)	Span Length Center to Center of Supports (ft-in)													
			24-0	25-0	26-0	27-0	28-0	29-0	30-0	31-0	32-0	33-0	34-0	35-0	36-0	37-0
1	18/18	0.0474/0.0474	55 / 98	53 / 87	51 / 77	49 / 69	47 / 62	46 / 56	44 / 50	43 / 44	41 / 39	40 / 34	39 / 30	38 / 27	37 / 24	36 / 22
	16/16	0.0600/0.0600	85 / 130	82 / 115	79 / 102	76 / 91	73 / 82	70 / 74	68 / 67	66 / 58	64 / 51	62 / 45	60 / 40	58 / 36	55 / 32	52 / 29
	14/14	0.0747/0.0747	127 / 166	122 / 147	117 / 131	113 / 117	109 / 105	105 / 94	102 / 85	98 / 75	95 / 66	90 / 58	85 / 52	80 / 46	75 / 41	71 / 37

SW9A

Span Condition	Gage	Design Thickness (in)	Span Length Center to Center of Supports (ft-in)													
			24-0	25-0	26-0	27-0	28-0	29-0	30-0	31-0	32-0	33-0	34-0	35-0	36-0	37-0
1	18/18	0.0474/0.0474	55 / 92	53 / 81	51 / 72	49 / 65	47 / 58	46 / 52	44 / 47	43 / 41	41 / 36	40 / 32	39 / 29	38 / 25	37 / 23	36 / 20
	16/16	0.0600/0.0600	85 / 122	82 / 108	79 / 96	76 / 86	73 / 77	70 / 69	68 / 63	66 / 55	64 / 48	62 / 43	60 / 38	57 / 34	54 / 30	51 / 27
	14/14	0.0747/0.0747	127 / 156	122 / 138	117 / 123	113 / 110	109 / 98	105 / 89	102 / 80	98 / 70	94 / 62	88 / 55	83 / 48	78 / 43	74 / 39	70 / 35

SW12

Span Condition	Gage	Design Thickness (in)	Span Length Center to Center of Supports (ft-in)												
			29-0	30-0	31-0	32-0	33-0	34-0	35-0	36-0	37-0	38-0	39-0	40-0	41-0	42-0
1	18/18	0.0474/0.0474	47 / 103	45 / 93	44 / 82	43 / 72	41 / 63	40 / 56	39 / 50	38 / 45	37 / 40	36 / 36	35 / 33	34 / 29	33 / 27	32 / 24
	16/16	0.0600/0.0600	73 / 138	70 / 125	68 / 109	66 / 96	64 / 85	62 / 76	60 / 67	59 / 60	57 / 54	56 / 48	54 / 44	53 / 39	51 / 36	50 / 32
	14/14	0.0747/0.0747	109 / 179	105 / 162	102 / 142	99 / 125	96 / 110	93 / 98	90 / 87	88 / 78	85 / 70	83 / 63	81 / 57	79 / 51	77 / 46	75 / 42

SW12A

Span Condition	Gage	Design Thickness (in)	Span Length Center to Center of Supports (ft-in)												
			29-0	30-0	31-0	32-0	33-0	34-0	35-0	36-0	37-0	38-0	39-0	40-0	41-0	42-0
1	18/18	0.0474/0.0474	47 / 97	45 / 87	44 / 77	43 / 67	41 / 60	40 / 53	39 / 47	38 / 42	37 / 38	36 / 34	35 / 31	34 / 28	33 / 25	32 / 23
	16/16	0.0600/0.0600	73 / 130	70 / 117	68 / 103	66 / 91	64 / 80	62 / 71	60 / 63	59 / 57	57 / 51	56 / 46	54 / 41	53 / 37	51 / 34	50 / 31
	14/14	0.0747/0.0747	109 / 168	105 / 152	102 / 133	99 / 117	96 / 104	93 / 92	90 / 82	88 / 73	85 / 66	83 / 59	81 / 53	79 / 48	77 / 44	75 / 40

SI Conversions: 1 inch = 25.4mm; 1 foot = 305mm; 1psf = 47.88 Pa

Notes:
1. Table 3.4 assumes that all loading is uniform.
2. Loads are based on ASD Design.
3. Uniform load values listed on the left side of the box, 100 / 75 , are goverened by stress and the values listed on the right side, 100 / **75** , are governed by deflection.
4. The deflection criteria used for generating the tables above were L/240 or 1.5" maximum. The registered design professional shall calculate the allowable uniform load if a different defleciton criteria is required.
5. Stress goverened values assume a maximum allowable stress of 24 ksi.
6. The above tables assume the minimum end bearing length is 4" for the SW9 and SW9A deck and 5" for the SW12 and SW12A deck.

TABLE 3.5 - SW15 & SW15A ALLOWABLE UNIFORM LOAD TABLES (psf)

SW15

Span Condition	Gage	Design Thickness (in)	Span Length Center to Center of Supports (ft-in)													
			33-0	34-0	35-0	36-0	37-0	38-0	39-0	40-0	41-0	42-0	43-0	44-0	45-0	46-0
1	18/18	0.0474/0.0474	42 / 103	41 / 91	40 / 81	39 / 73	38 / 65	37 / 59	36 / 53	35 / 48	34 / 43	33 / 39	32 / 36	32 / 33	31 / 30	30 / 27
	16/16	0.0600/0.0600	66 / 139	64 / 123	62 / 110	60 / 98	58 / 88	57 / 79	55 / 71	54 / 64	53 / 58	51 / 53	50 / 48	49 / 44	48 / 40	47 / 37
	14/14	0.0747/0.0747	98 / 180	95 / 160	93 / 142	90 / 127	88 / 114	85 / 102	83 / 92	81 / 83	79 / 76	77 / 69	75 / 62	74 / 57	72 / 52	71 / 48

SW15A

Span Condition	Gage	Design Thickness (in)	Span Length Center to Center of Supports (ft-in)													
			33-0	34-0	35-0	36-0	37-0	38-0	39-0	40-0	41-0	42-0	43-0	44-0	45-0	46-0
1	18/18	0.0474/0.0474	42 / 97	41 / 86	40 / 76	39 / 68	38 / 61	37 / 55	36 / 50	35 / 45	34 / 41	33 / 37	32 / 34	32 / 31	31 / 28	30 / 26
	16/16	0.0600/0.0600	66 / 130	64 / 116	62 / 103	60 / 92	58 / 82	57 / 74	55 / 67	54 / 60	53 / 55	51 / 50	50 / 45	49 / 41	48 / 38	47 / 35
	14/14	0.0747/0.0747	98 / 169	95 / 150	93 / 134	90 / 120	88 / 107	85 / 96	83 / 87	81 / 78	79 / 71	77 / 65	75 / 59	74 / 54	72 / 49	71 / 45

SI Conversions: 1 inch = 25.4mm; 1 foot = 305mm; 1psf = 47.88 Pa

Notes:
1. Table 3.5 assumes that all loading is uniform.
2. Loads are based on ASD Design.
3. Uniform load values listed on the left side of the box, 100 / 75 , are goverened by stress and the values listed on the right side, 100 / **75** , are governed by deflection.
4. The deflection criteria used for generating the tables above were L/240 or 1.5" maximum. The registered design professional shall calculate the allowable uniform load if a different defleciton criteria is required.
5. Stress goverened values assume a maximum allowable stress of 24 ksi.
6. The above tables assume the minimum end bearing length is 6".

TABLE 3.6 - ENVISTA 4.5, ENVISTA 4.5A, ENVISTA 6.0, ENVISTA 6.0A, ENVISTA 7.5 & ENVISTA 7.5A ALLOWABLE UNIFORM LOAD TABLES (psf)

ENVISTA 4.5 & ENVISTA 4.5A

Span Condition	Gage	Design Thick. (in)	Span Length Center to Center of Supports (ft-in)														
			12-0	13-0	14-0	15-0	16-0	17-0	18-0	19-0	20-0	21-0	22-0	23-0	24-0	25-0	26-0
1	18	0.0474	110 / 109	94 / 85	81 / 68	70 / 56	62 / 46	55 / 38	49 / 32	44 / 27	40 / 23	-	-	-	-	-	-
	16	0.0600	142 / 144	121 / 113	104 / 90	91 / 74	80 / 61	71 / 51	63 / 43	57 / 36	51 / 31	46 / 26	42 / 21	-	-	-	-
	14	0.0747	180 / 184	153 / 145	132 / 116	115 / 94	101 / 78	90 / 65	80 / 54	72 / 46	65 / 40	59 / 33	54 / 27	49 / 23	-	-	-
2	18	0.0474	86 / 262	79 / 206	73 / 165	68 / 134	64 / 110	59 / 92	52 / 78	47 / 66	42 / 57	38 / 46	35 / 39	32 / 32	29 / 27	27 / 23	25 / 20
	16	0.0600	130 / 346	120 / 272	109 / 218	95 / 177	84 / 146	74 / 122	66 / 102	59 / 87	54 / 75	49 / 61	44 / 51	41 / 43	37 / 36	34 / 31	32 / 26
	14	0.0747	187 / 443	159 / 348	137 / 279	119 / 227	105 / 187	93 / 156	83 / 131	74 / 112	67 / 96	61 / 79	56 / 65	51 / 55	47 / 46	43 / 39	40 / 33

ENVISTA 6.0 & ENVISTA 6.0A

Span Condition	Gage	Design Thick. (in)	Span Length Center to Center of Supports (ft-in)														
			15-0	16-0	17-0	18-0	19-0	20-0	21-0	22-0	23-0	24-0	25-0	26-0	27-0	28-0	29-0
1	18	0.0474	84 / 109	79 / 90	74 / 75	70 / 63	66 / 54	60 / 46	54 / 38	49 / 31	45 / 26	41 / 22	-	-	-	-	
	16	0.0600	130 / 145	121 / 120	107 / 100	96 / 84	86 / 72	78 / 61	70 / 50	64 / 42	59 / 35	54 / 30	50 / 25	46 / 21	-	-	-
	14	0.0747	175 / 186	154 / 153	136 / 128	121 / 108	109 / 92	98 / 78	89 / 65	81 / 54	74 / 45	68 / 38	63 / 32	58 / 27	54 / 24	50 / 20	-

ENVISTA 7.5 & ENVISTA 7.5A

Span Condition	Gage	Design Thick. (in)	Span Length Center to Center of Supports (ft-in)														
			17-0	18-0	19-0	20-0	21-0	22-0	23-0	24-0	25-0	26-0	27-0	28-0	29-0	30-0	31-0
1	18	0.0474	71 / 126	67 / 106	63 / 90	60 / 77	57 / 64	55 / 53	52 / 44	50 / 37	48 / 32	46 / 27	44 / 23	42 / 20	-	-	-
	16	0.0600	110 / 169	104 / 142	99 / 121	94 / 103	89 / 85	85 / 71	81 / 59	74 / 50	68 / 42	63 / 36	59 / 31	54 / 27	51 / 23	47 / 20	-
	14	0.0747	167 / 216	157 / 182	149 / 155	136 / 133	123 / 109	112 / 91	103 / 76	94 / 64	87 / 54	80 / 46	75 / 40	69 / 35	65 / 30	60 / 26	57 / 23

SI Conversions: 1 inch = 25.4mm; 1 foot = 305mm; 1psf = 47.88 Pa

Notes:
1. Table 3.6 assumes that all loading is uniform.
2. Loads are based on ASD Design.
3. Uniform load values listed on the left side of the box, 100 / 75, are goverened by stress and the values listed on the right side, 100 / 75, are governed by deflection.
4. The deflection criteria used for generating the tables above were L/240 or 1" maximum. The registered design professional shall calculate the allowable uniform load if a different defleciton criteria is required.
5. Stress goverened values assume a maximum allowable stress of 24 ksi.
6. The above tables assume the minimum end bearing length is 4" and the minimum interior bearing length is 6".

TABLE 3.7 - ER2R & ER2RA ALLOWABLE UNIFORM LOAD TABLES (psf)

ER2R

Span Condition	Gage	Design Thick. (in)	Span Length Center to Center of Supports (ft-in)												
			6-0	6-6	7-0	7-6	8-0	9-0	10-0	11-0	12-0	13-0	14-0	15-0	16-0
1	22	0.0295	120/116	102/91	88/73	77/59	68/49	53/34	43/25	-	-	-	-	-	-
	20	0.0358	151/143	129/112	111/90	97/73	86/60	67/42	54/31	45/23	-	-	-	-	-
	18	0.0474	209/192	178/151	153/121	134/98	118/81	93/57	75/41	62/31	52/24	-	-	-	-
	16	0.0600	262/240	223/189	193/151	168/123	148/101	117/71	94/52	78/39	66/30	56/24			
2	22	0.0295	111/278	95/219	82/175	71/142	63/117	49/82	40/60	33/45	28/35	24/27	20/22	-	-
	20	0.0358	138/344	117/271	101/217	88/176	78/145	61/102	50/74	41/56	34/43	29/34	25/27	22/22	-
	18	0.0474	191/400	163/363	140/290	122/236	108/195	85/137	69/100	57/75	48/58	41/45	35/36	31/30	27/23
	16	0.0600	253/400	216/400	186/364	162/296	143/244	113/171	91/125	75/94	63/72	54/57	47/46	41/37	36/29
3 or more	22	0.0295	139/218	118/171	102/137	89/111	78/92	62/64	50/47	41/35	35/27	30/21	-	-	-
	20	0.0358	172/269	147/212	127/170	110/138	97/114	77/80	62/58	51/44	43/34	37/26	32/21	-	-
	18	0.0474	239/361	204/284	176/227	153/185	134/152	106/107	86/78	71/59	60/45	51/35	44/28	38/23	-
	16	0.0600	317/400	270/356	233/285	203/232	178/191	141/134	114/98	94/73	79/57	67/44	58/36	51/29	45/22

ER2RA

Span Condition	Gage	Design Thick. (in)	Span Length Center to Center of Supports (ft-in)												
			6-0	6-6	7-0	7-6	8-0	9-0	10-0	11-0	12-0	13-0	14-0	15-0	16-0
1	22	0.0295	116/109	98/86	85/69	74/56	65/46	51/32	42/24	-	-	-	-	-	-
	20	0.0358	147/134	125/105	108/84	94/68	83/56	65/40	53/29	44/22	-	-	-	-	-
	18	0.0474	204/179	174/141	150/113	131/92	115/76	91/53	74/39	61/29	51/22	-	-	-	-
	16	0.0600	258/225	220/177	189/142	165/115	145/95	115/67	93/49	77/37	64/28	55/22	-	-	-
2	22	0.0295	107/263	91/207	78/166	68/135	60/111	47/78	38/57	32/43	27/33	23/26	20/21	-	-
	20	0.0358	129/322	110/253	95/203	82/165	73/136	57/95	46/70	38/52	32/40	27/32	24/25	21/21	-
	18	0.0474	178/400	151/340	131/172	114/221	100/182	79/128	64/93	53/70	44/54	38/42	33/34	28/28	25/21
	16	0.0600	240/400	204/400	176/341	154/277	135/228	107/160	86/117	71/88	60/68	51/53	44/43	38/35	34/27
3 or more	22	0.0295	133/206	114/162	98/130	85/106	75/87	59/61	48/45	40/33	33/26	28/20	-	-	-
	20	0.0358	161/252	137/198	118/159	103/129	91/106	72/75	58/54	48/41	40/31	34/25	30/20	-	-
	18	0.0474	222/338	189/266	163/213	142/173	125/143	99/100	80/73	66/55	56/42	47/33	41/27	36/22	-
	16	0.0600	300/400	256/333	220/267	192/217	169/179	133/126	108/92	89/69	75/53	64/42	55/33	48/27	42/21

Notes:
1. Table 3.7 assumes that all loading is uniform.
2. Loads are based on ASD Design.
3. Uniform load values listed on the left side of the box, **100** / 75, are goverened by strength and the values listed on the right side, 100 / **75**, are governed by deflection.
4. The deflection criteria used for generating Table 3.7 were L/240 or 0.75 inch maximum. The registered desgin professional shall calculate the allowable uniform load if a different deflection criteria is required.
5. Stress goverened values assume a maximum allowable stress of 24 ksi.
6. The tabulated loads are valid where the minimum end bearing length is 1.5 inches and the minimum interior bearing length is 3 inches.

TABLE 3.8 - ER3.5 & ER3.5A ALLOWABLE UNIFORM LOAD TABLES (psf)

ER3.5

Span Condition	Gage	Design Thick. (in)	Span Length Center to Center of Supports (ft-in)												
			12-0	13-0	14-0	15-0	16-0	17-0	18-0	19-0	20-0	21-0	22-0	23-0	24-0
1	20	0.0358	77/70	65/55	56/44	49/36	43/29	38/25	34/21	-	-	-	-	-	-
	18	0.0474	112/95	96/75	82/60	72/49	63/40	56/33	50/28	45/24	40/21	-	-	-	-
	16	0.0600	151/121	129/95	111/76	97/62	85/51	75/42	67/36	60/30	54/26	49/21	-	-	-
2	20	0.0358	80/168	74/132	66/106	58/86	51/71	45/59	40/50	36/42	32/36	29/30	27/25	24/21	-
	18	0.0474	122/229	104/180	90/144	78/117	69/96	61/80	54/68	49/58	44/49	40/41	36/34	33/28	31/24
	16	0.0600	157/291	133/229	115/183	100/149	88/123	78/102	70/86	62/73	56/63	51/52	47/43	43/36	39/30
3 or more	20	0.0358	91/132	84/104	78/83	72/67	63/56	56/46	50/39	45/33	41/28	37/23	-	-	-
	18	0.0474	152/179	130/141	112/113	98/92	86/76	76/63	68/53	61/45	55/39	50/32	45/26	42/22	-
	16	0.0600	196/228	167/179	144/143	125/117	110/96	98/80	87/67	78/57	71/49	64/40	58/34	53/28	49/24

ER3.5A

Span Condition	Gage	Design Thick. (in)	Span Length Center to Center of Supports (ft-in)												
			12-0	13-0	14-0	15-0	16-0	17-0	18-0	19-0	20-0	21-0	22-0	23-0	24-0
1	20	0.0358	76/66	64/52	56/41	48/34	43/28	38/23	-	-	-	-	-	-	-
	18	0.0474	110 / 89	94 / 70	81 / 56	70 / 46	62 / 38	55 / 31	49 / 26	44 / 22	-	-	-	-	-
	16	0.0600	148 / 114	126 / 89	109 / 72	95 / 58	83 / 48	74 / 40	66 / 34	59 / 29	53 / 25	48 / 20	-	-	-
2	20	0.0358	80/158	72/124	62/100	54/81	48/67	42/56	38/47	34/40	30/34	28/28	25/23	23/20	-
	18	0.0474	114 / 215	98 / 169	84 / 135	73 / 110	64 / 91	57 / 76	51 / 64	46 / 54	41 / 46	37 / 38	34 / 32	31 / 27	29 / 22
	16	0.0600	148 / 274	126 / 215	109 / 172	95 / 140	83 / 115	74 / 96	66 / 81	59 / 69	53 / 59	48 / 49	44 / 40	40 / 34	37 / 28
3 or more	20	0.0358	91/124	84/97	78/78	68/63	59/52	53/44	47/37	42/31	38/27	34/22	-	-	-
	18	0.0474	143 / 168	122 / 132	105 / 106	92 / 86	80 / 71	71 / 59	64 / 50	57 / 42	52 / 36	47 / 30	43 / 25	39 / 21	-
	16	0.0600	185 / 214	157 / 168	136 / 135	118 / 110	104 / 90	92 / 75	82 / 63	74 / 54	67 / 46	60 / 38	55 / 32	50 / 26	46 / 22

Notes:
1. Table 3.8 assumes that all loading is uniform.
2. Loads are based on ASD Design.
3. Uniform load values listed on the left side of the box, **100** / 75, are goverened by stress and the values listed on the right side, 100 / **75**, are governed by deflection.
4. The deflection criteria used for generating Table 3.8 were L/240 or 1 inch maximum. The registered design professional shall calculate the allowable uniform load if a different defleciton criteria is required.
5. Stress goverened values assume a maximum allowable stress of 24 ksi.
6. The tabulted loads are valid where the minimum end bearing length is 1.5 inches and the minimum interior bearing length is 3 inches.

TABLE 3.9 – Epicore Allowable Uniform Load Capacity (psf) For Simple Span Conditions[1,2,3,4]
fy = 40 ksi, Normal Weight Concrete (145 pcf) f'c = 3 ksi

Overall Slab Depth (inches)	Gage	Spans, Center to Center of Supports (ft)														
		6	7	8	9	10	11	12	13	14	15	16	17	18	19	20
4	22	451	339	266	215	178	146	103	71	-	-	-	-	-	-	-
	20	500	425	340	280	225	162	114	80	54	-	-	-	-	-	-
	18	500	500	462	376	261	185	131	93	65	-	-	-	-	-	-
	16	500	500	461	386	291	206	148	106	75	52	-	-	-	-	-
4.5	22	500	390	305	247	204	172	140	110	78	54	-	-	-	-	-
	20	500	489	391	322	267	214	169	122	87	61	-	-	-	-	-
	18	500	500	500	445	353	266	193	140	101	72	50	-	-	-	-
	16	500	500	500	445	381	296	215	158	115	84	59	-	-	-	-
5	22	500	440	345	279	231	195	162	132	108	83	58	-	-	-	-
	20	500	500	442	364	307	249	202	165	128	93	66	-	-	-	-
	18	500	500	500	500	410	331	269	199	147	108	79	56	-	-	-
	16	500	500	500	500	431	376	299	222	166	124	91	66	-	-	-
5.5	22	500	491	385	311	257	217	186	151	124	102	83	62	-	-	-
	20	500	500	492	406	342	284	231	190	157	130	97	70	-	-	-
	18	500	500	500	500	469	379	311	257	203	153	114	84	61	-	-
	16	500	500	500	500	481	419	370	300	227	172	130	97	72	51	-
6	22	500	500	424	343	284	240	205	171	140	115	95	78	64	-	-
	20	500	500	500	448	377	320	261	214	177	148	123	101	74	52	-
	18	500	500	500	500	500	428	351	291	244	205	157	119	89	65	-
	16	500	500	500	500	500	462	409	366	300	230	177	135	103	76	55
6.5	22	500	500	464	375	310	262	225	191	157	129	107	88	72	59	-
	20	500	500	500	489	413	354	291	239	198	165	138	116	97	77	55
	18	500	500	500	500	500	477	392	325	272	230	195	159	122	92	68
	16	500	500	500	500	500	500	447	400	350	297	232	180	140	107	80
7	22	500	500	500	407	337	284	244	211	173	143	118	98	80	66	53
	20	500	500	500	500	448	385	321	265	220	183	154	129	108	91	76
	18	500	500	500	500	500	500	433	360	302	255	216	184	158	124	95
	16	500	500	500	500	500	500	485	434	388	330	282	233	183	142	110
7.5	22	500	500	500	439	363	307	263	229	190	157	130	108	89	73	59
	20	500	500	500	500	483	415	352	290	241	201	169	142	119	100	84
	18	500	500	500	500	500	500	475	395	331	280	238	203	174	149	126
	16	500	500	500	500	500	500	500	468	423	362	310	267	231	184	144
8	22	500	500	500	471	390	329	282	245	207	172	142	118	97	80	65
	20	500	500	500	500	500	445	383	316	263	220	184	155	131	110	92
	18	500	500	500	500	500	500	500	430	361	305	259	221	190	163	140
	16	500	500	500	500	500	500	500	500	454	395	339	292	252	219	184

FOR SI: 1 ksi = 6.89 MPa, 1 pcf = 16.0 kg/m^3, 1 psf = 0.0479 kN/m^2, 1 inch = 25.4 mm, 1 foot = 304.8 mm, 1 in^2/foot = 59.27 mm^2/m

1. The maximum unshored span for the deck is shown in Table 3.25 of this report.
2. All loads are assumed to be statically applied.
3. Deflection limit of the composite slab is 1/360 of span under total load, which includes live load, weight of concrete and weight of deck.
4. Longitudinal and transverse reinforcement bars having a yield strength of at least 60 ksi or welded wire fabric shall be provided. Area of this reinforcement shall be equal to 0.00075 times the area of concrete above the steel deck but not less than 0.028 in^2 per foot of width.

TABLE 3.10 – Epicore Allowable Uniform Load Capacity (psf) For Continuous Span Conditions[1,2,3,4,5]
fy = 40 ksi, Normal Weight Concrete (145 pcf) f'c = 3 ksi

Overall Slab Depth (inches)	Gage	Spans, Center to Center of Supports (ft)														
		12	13	14	15	16	17	18	19	20	21	22	23	24	25	26
4	22	174	143	119	98	73	53	-	-	-	-	-	-	-	-	-
	20	214	177	144	108	81	60	-	-	-	-	-	-	-	-	-
	18	232	212	165	125	95	71	52	-	-	-	-	-	-	-	-
	16	231	211	184	141	107	82	61	-	-	-	-	-	-	-	-
4.5	22	207	170	141	118	99	83	63	-	-	-	-	-	-	-	-
	20	253	210	176	148	123	94	71	52	-	-	-	-	-	-	-
	18	261	238	218	184	142	110	84	63	-	-	-	-	-	-	-
	16	260	237	217	200	160	124	96	74	55	-	-	-	-	-	-
5	22	240	198	165	138	116	97	82	69	54	-	-	-	-	-	-
	20	291	244	204	172	146	124	106	82	62	-	-	-	-	-	-
	18	290	264	242	223	200	158	124	96	74	56	-	-	-	-	-
	16	289	264	242	222	206	178	140	110	86	66	-	-	-	-	-
5.5	22	274	226	188	158	133	112	95	80	68	57	-	-	-	-	-
	20	320	279	234	197	168	143	122	105	90	70	53	-	-	-	-
	18	319	291	266	245	227	197	171	137	108	84	65	-	-	-	-
	16	318	290	266	245	226	210	194	155	123	97	76	58	-	-	-
6	22	308	255	212	178	150	127	108	91	77	65	55	-	-	-	-
	20	349	315	264	223	190	162	139	119	102	88	75	60	-	-	-
	18	348	317	291	268	247	223	194	168	147	118	94	73	56	-	-
	16	347	316	290	267	247	229	213	199	168	135	108	86	67	51	-
6.5	22	343	284	237	199	168	142	121	102	87	73	62	52	-	-	-
	20	378	344	294	249	212	181	155	133	115	99	85	73	62	50	-
	18	377	343	315	290	268	249	217	189	164	144	126	103	81	63	-
	16	376	343	314	289	267	248	231	216	202	180	146	118	95	75	58
7	22	367	313	262	220	186	158	134	114	97	82	69	58	-	-	-
	20	407	370	325	275	234	201	172	148	128	110	95	81	70	59	50
	18	406	370	339	312	289	268	240	209	183	160	140	123	108	88	69
	16	405	369	338	311	288	267	249	232	218	204	188	157	128	103	82
7.5	22	379	343	287	241	204	173	147	125	107	91	77	64	54	-	-
	20	420	382	350	302	257	220	189	163	141	121	105	90	77	66	56
	18	435	396	363	334	309	287	264	230	201	176	154	136	119	104	91
	16	434	396	362	334	309	286	267	249	233	219	206	184	163	136	111
8	22	391	355	312	263	222	189	161	137	117	99	84	71	59	-	-
	20	432	393	360	329	280	240	206	178	154	133	115	99	85	73	62
	18	464	423	387	357	330	306	285	251	220	192	169	148	130	115	100
	16	463	422	387	356	329	306	285	266	249	233	220	201	179	159	141

FOR SI: 1 ksi = 6.89 MPa, 1 pcf = 16.0 kg/m^3, 1 psf = 0.0479 kN/m^2, 1 inch = 25.4 mm, 1 foot = 304.8 mm, 1 in^2/foot = 59.27 mm^2/m

1. The maximum unshored span for the deck is shown in Table 3.25 of this report.
2. All loads are assumed to be statically applied.
3. Deflection limit of the composite slab is 1/360 of span under total load, which includes live load, weight of concrete and weight of deck.
4. Longitudinal and transverse reinforcement bars having a yield strength of at least 60 ksi or welded wire fabric shall be provided. Area of this reinforcement shall be equal to 0.00075 times the area of concrete above the steel deck but not less than 0.028 in^2 per foot of width.
5. Continuous span conditions are based on continuity over interior supports, which requires appropriate negative moment steel reinforcement.

TABLE 3.11 – Epicore-A Allowable Uniform Load Capacity (psf) For Simple Span Conditions[1,2,3,4]
fy = 40 ksi, Normal Weight Concrete (145 pcf) f'c = 3 ksi

Overall Slab Depth (inches)	Gage	Spans, Center to Center of Supports (ft)														
		6	7	8	9	10	11	12	13	14	15	16	17	18	19	20
4	20	500	423	335	273	228	175	126	91	65	-	-	-	-	-	-
	18	500	493	390	318	263	188	136	99	72	51	-	-	-	-	-
	16	500	495	391	319	266	203	147	108	78	56	-	-	-	-	-
4.5	20	500	488	386	315	263	224	182	134	99	72	52	-	-	-	-
	18	500	500	450	367	306	261	197	145	108	79	57	-	-	-	-
	16	500	500	451	368	307	261	213	158	117	87	63	-	-	-	-
5	20	500	500	437	357	298	254	220	188	141	105	78	57	-	-	-
	18	500	500	500	416	347	295	255	204	153	115	86	63	-	-	-
	16	500	500	500	417	348	296	256	220	166	125	94	70	51	-	-
5.5	20	500	500	489	399	333	284	246	215	191	146	110	83	61	-	-
	18	500	500	500	464	388	330	285	250	209	159	121	92	68	50	-
	16	500	500	500	465	389	331	286	251	222	173	132	101	76	56	-
6	20	500	500	500	441	368	314	271	238	211	189	150	115	87	65	-
	18	500	500	500	500	428	365	315	276	245	212	164	126	96	73	53
	16	500	500	500	500	429	365	316	277	245	219	178	138	106	81	60
6.5	20	500	500	500	483	403	344	297	261	231	207	181	153	118	90	68
	18	500	500	500	500	469	399	345	303	268	240	214	167	130	100	76
	16	500	500	500	500	470	400	346	303	268	240	216	183	143	111	85
7	20	500	500	500	500	438	373	323	283	251	225	201	172	148	120	92
	18	500	500	500	500	500	434	375	329	291	260	235	211	169	133	103
	16	500	500	500	500	500	435	376	329	292	261	235	214	185	146	115
7.5	20	500	500	500	500	473	403	349	306	271	243	219	190	163	140	120
	18	500	500	500	500	500	469	405	355	314	281	254	230	201	171	135
	16	500	500	500	500	500	469	406	356	315	282	254	231	211	187	149
8	20	500	500	500	500	500	433	375	328	291	261	235	208	178	153	132
	18	500	500	500	500	500	500	435	381	338	302	272	247	220	191	166
	16	500	500	500	500	500	500	436	382	338	302	273	248	226	208	188

FOR SI: 1 ksi = 6.89 MPa, 1 pcf = 16.0 kg/m^3, 1 psf = 0.0479 kN/m^2, 1 inch = 25.4 mm, 1 foot = 304.8 mm, 1 in^2/foot = 59.27 mm^2/m

1. The maximum unshored span for the deck is shown in Table 3.26 of this report.
2. All loads are assumed to be statically applied.
3. The deflection limit of the composite slab is 1/360 of span under total load, which includes live load, the weight of concrete, and the weight of the deck.
4. Longitudinal and transverse reinforcement bars having a yield strength of at least 60 ksi or welded wire fabric shall be provided. The area of this reinforcement shall be equal to 0.00075 times the area of concrete above the steel deck but not less than 0.028 in^2 per foot of width.

TABLE 3.12 – Toris C Allowable Uniform Load Capacity (psf) For Simple Span Conditions[1,2,3,4]
fy = 40 ksi, Normal Weight Concrete (145 pcf) f'c = 3 ksi

Overall Slab Depth (inches)	Gage	Spans, Center to Center of Supports (ft)														
		8	9	10	11	12	13	14	15	16	17	18	19	20	21	22
4.5	20	365	296	238	190	153	110	78	53	-	-	-	-	-	-	-
	18	497	396	313	245	176	127	91	64	-	-	-	-	-	-	-
	16	496	404	336	273	198	144	104	75	52	-	-	-	-	-	-
5	20	416	338	279	223	181	147	115	83	58	-	-	-	-	-	-
	18	500	461	369	297	242	182	134	98	70	-	-	-	-	-	-
	16	500	461	384	326	275	204	151	112	81	58	-	-	-	-	-
5.5	20	468	380	316	259	210	171	141	117	87	62	-	-	-	-	-
	18	500	500	426	344	281	232	186	139	103	75	53	-	-	-	-
	16	500	500	431	366	316	276	208	157	118	87	63	-	-	-	-
6	20	500	422	351	295	239	196	162	134	112	91	65	-	-	-	-
	18	500	500	480	393	321	266	222	186	143	107	79	56	-	-	-
	16	500	500	479	407	351	307	271	211	162	123	92	67	-	-	-
6.5	20	500	464	386	327	270	222	183	152	127	106	88	68	-	-	-
	18	500	500	500	442	363	300	251	211	179	145	110	82	59	-	-
	16	500	500	500	447	386	337	298	266	213	165	127	96	71	51	-
7	20	500	500	420	357	301	248	205	171	142	119	100	83	69	-	-
	18	500	500	500	488	405	335	281	236	200	170	145	113	85	62	-
	16	500	500	500	488	421	368	325	290	261	214	167	130	99	74	53
7.5	20	500	500	455	386	333	274	227	189	158	133	111	93	77	64	50
	18	500	500	500	500	447	371	311	262	222	189	162	138	114	86	64
	16	500	500	500	500	456	398	352	315	283	248	214	169	132	101	76
8	20	500	500	490	416	358	301	249	208	174	146	123	103	86	71	59
	18	500	500	500	500	491	407	341	288	245	209	178	153	131	112	88
	16	500	500	500	500	491	429	379	339	305	274	236	205	169	133	103
8.5	20	500	500	500	445	384	327	272	227	191	160	135	113	95	79	65
	18	500	500	500	500	500	444	372	315	267	228	195	167	144	123	106
	16	500	500	500	500	500	460	406	363	327	296	259	224	195	169	134

FOR SI: 1 ksi = 6.89 MPa, 1 pcf = 16.0 kg/m^3, 1 psf = 0.0479 kN/m^2, 1 inch = 25.4 mm, 1 foot = 304.8 mm, 1 in^2/foot = 59.27 mm^2/m

1. The maximum unshored span for the deck is shown in Table 3.27 of this report.
2. All loads are assumed to be statically applied.
3. The deflection limit of the composite slab is 1/360 of span under total load, which includes live load, the weight of concrete, and the weight of the deck.
4. Longitudinal and transverse reinforcement bars having a yield strength of at least 60 ksi or welded wire fabric shall be provided. The area of this reinforcement shall be equal to 0.00075 times the area of concrete above the steel deck but not less than 0.028 in^2 per foot of width.

TABLE 3.13 – Toris C Allowable Uniform Load Capacity (psf) For Continuous Span Conditions[1,2,3,4,5]
fy = 40 ksi, Normal Weight Concrete (145 pcf) f'c = 3 ksi

Overall Slab Depth (inches)	Gage	Spans, Center to Center of Supports (ft)														
		14	15	16	17	18	19	20	21	22	23	24	25	26	27	28
4.5	20	155	130	109	84	63	-	-	-	-	-	-	-	-	-	-
	18	208	168	129	99	75	56	-	-	-	-	-	-	-	-	-
	16	218	189	146	113	86	65	-	-	-	-	-	-	-	-	-
5	20	183	154	130	110	93	73	54	-	-	-	-	-	-	-	-
	18	243	208	177	144	112	86	65	-	-	-	-	-	-	-	-
	16	242	223	206	162	127	99	76	58	-	-	-	-	-	-	-
5.5	20	212	179	151	128	109	93	79	62	-	-	-	-	-	-	-
	18	267	242	206	177	153	124	97	75	57	-	-	-	-	-	-
	16	266	245	227	210	177	141	111	87	67	50	-	-	-	-	-
6	20	242	204	173	147	126	108	92	78	67	52	-	-	-	-	-
	18	291	268	236	203	176	152	132	107	84	64	-	-	-	-	-
	16	290	267	247	229	214	191	153	123	97	76	58	-	-	-	-
6.5	20	273	231	196	167	143	122	105	90	77	65	55	-	-	-	-
	18	315	290	267	230	199	173	150	131	114	92	72	55	-	-	-
	16	314	290	268	249	232	216	197	165	133	107	85	66	50	-	-
7	20	305	258	219	187	160	137	118	101	87	74	63	53	-	-	-
	18	339	313	289	257	223	194	169	147	129	112	98	79	61	-	-
	16	339	312	288	268	249	233	218	195	172	143	116	93	73	56	-
7.5	20	337	285	242	207	178	153	131	113	97	83	71	60	51	-	-
	18	364	335	310	285	247	215	188	164	143	125	110	96	84	66	50
	16	363	334	309	287	267	249	234	217	192	170	150	124	100	80	62
8	20	361	313	266	228	195	168	145	125	107	92	79	67	57	-	-
	18	388	357	330	307	272	237	207	181	158	139	122	107	93	81	70
	16	387	356	330	306	285	266	249	234	212	188	166	148	131	107	86
8.5	20	361	313	266	228	195	168	145	125	107	92	79	67	57	-	-
	18	388	357	330	307	272	237	207	181	158	139	122	107	93	81	70
	16	387	356	330	306	285	266	249	234	212	188	166	148	131	107	86

FOR SI: 1 ksi = 6.89 MPa, 1 pcf = 16.0 kg/m^3, 1 psf = 0.0479 kN/m^2, 1 inch = 25.4 mm, 1 foot = 304.8 mm, 1 in^2/foot = 59.27 mm^2/m

1. The maximum unshored span for the deck is shown in Table 3.27 of this report.
2. All loads are assumed to be statically applied.
3. The deflection limit of the composite slab is 1/360 of the span under the total load, which includes the live load, the weight of concrete, and the weight of the deck.
4. Longitudinal and transverse reinforcement bars having a yield strength of at least 60 ksi or welded wire fabric shall be provided. The area of this reinforcement shall be equal to 0.00075 times the area of concrete above the steel deck but not less than 0.028 in^2 per foot of width.
5. Continuous span conditions are based on continuity over interior supports, which requires appropriate negative moment steel reinforcement.

TABLE 3.14 – Toris CA Allowable Uniform Load Capacity (psf) For Simple Span Conditions[1,2,3,4]
fy = 40 ksi, Normal Weight Concrete (145 pcf) f'c = 3 ksi

Overall Slab Depth (inches)	Gage	Spans, Center to Center of Supports (ft)														
		8	9	10	11	12	13	14	15	16	17	18	19	20	21	22
4.5	20	384	316	251	203	166	128	95	70	51	-	-	-	-	-	-
	18	454	381	307	249	186	138	103	76	56	-	-	-	-	-	-
	16	455	382	328	269	198	148	110	82	61	-	-	-	-	-	-
5	20	441	367	301	243	199	165	133	100	75	55	-	-	-	-	-
	18	500	438	367	297	245	191	144	109	82	61	-	-	-	-	-
	16	500	439	376	328	272	204	154	117	88	66	-	-	-	-	-
5.5	20	499	415	353	286	234	194	162	136	104	78	58	-	-	-	-
	18	500	494	424	349	287	239	195	149	114	86	65	-	-	-	-
	16	500	495	425	370	328	273	208	160	122	94	71	52	-	-	-
6	20	500	463	394	330	271	225	188	158	134	107	81	61	-	-	-
	18	500	500	472	403	332	276	232	197	152	118	90	68	50	-	-
	16	500	500	473	413	365	327	273	211	164	127	98	75	56	-	-
6.5	20	500	500	435	376	309	256	215	181	153	131	109	84	63	-	-
	18	500	500	500	454	378	315	265	225	192	155	121	93	71	53	-
	16	500	500	500	455	402	360	315	268	213	167	131	102	78	59	-
7	20	500	500	475	412	348	289	242	204	173	148	126	108	85	64	-
	18	500	500	500	496	425	354	298	253	216	186	156	123	95	73	55
	16	500	500	500	497	440	393	355	302	259	214	169	134	105	81	61
7.5	20	500	500	500	447	387	322	270	228	194	165	141	121	104	86	65
	18	500	500	500	500	473	394	332	282	241	207	179	155	124	97	75
	16	500	500	500	500	477	427	385	337	289	250	214	171	136	107	83
8	20	500	500	500	482	424	355	298	252	214	183	157	134	115	99	85
	18	500	500	500	500	500	435	367	312	267	229	198	172	149	125	98
	16	500	500	500	500	500	460	416	372	320	276	240	209	171	137	108
8.5	20	500	500	500	500	455	389	327	276	235	201	172	148	127	109	94
	18	500	500	500	500	500	477	402	342	293	252	217	188	164	142	124
	16	500	500	500	500	500	493	446	406	351	303	263	230	201	171	138

FOR SI: 1 ksi = 6.89 MPa, 1 pcf = 16.0 kg/m^3, 1 psf = 0.0479 kN/m^2, 1 inch = 25.4 mm, 1 foot = 304.8 mm, 1 in^2/foot = 59.27 mm^2/m

1. The maximum unshored span for the deck is shown in Table 3.28 of this report.
2. All loads are assumed to be statically applied.
3. The deflection limit of the composite slab is 1/360 of the span under the total load, which includes the live load, the weight of concrete, and the weight of the deck.
4. Longitudinal and transverse reinforcement bars having a yield strength of at least 60 ksi or welded wire fabric shall be provided. The area of this reinforcement shall be equal to 0.00075 times the area of concrete above the steel deck but not less than 0.028 in^2 per foot of width.

TABLE 3.15 – Epicore 3.5 Allowable Uniform Load Capacity (psf) For Simple Span Conditions[1,2,3,4]
fy = 40 ksi, Normal Weight Concrete (145 pcf) f'c = 3 ksi

Overall Slab Depth (inches)	Gage	Spans, Center to Center of Supports (ft)														
		8	9	10	11	12	13	14	15	16	17	18	19	20	21	22
5.5	20	409	325	265	221	187	160	139	118	94	69	-	-	-	-	-
	18	476	379	310	258	219	188	164	144	110	82	59	-	-	-	-
	16	475	379	309	258	219	188	163	143	126	94	70	50	-	-	-
6	20	458	365	297	248	209	180	156	136	113	95	71	51	-	-	-
	18	500	425	347	290	245	211	183	161	143	113	85	62	-	-	-
	16	500	425	347	289	245	211	183	161	143	127	98	73	53	-	-
6.5	20	500	404	330	274	232	199	173	152	129	108	91	74	53	-	-
	18	500	471	385	321	272	234	203	179	158	141	116	88	65	-	-
	16	500	471	385	321	272	234	203	178	158	141	127	101	76	56	-
7	20	500	444	362	301	255	219	190	166	145	122	103	86	72	55	-
	18	500	500	423	353	299	257	223	196	174	155	140	118	90	67	-
	16	500	500	422	352	298	256	223	196	174	155	139	126	104	79	58
7.5	20	500	483	394	328	278	238	207	181	160	137	115	97	81	68	56
	18	500	500	461	384	325	280	243	214	189	169	152	138	120	92	69
	16	500	500	460	384	325	279	243	213	189	169	152	137	125	106	81
8	20	500	500	426	355	300	258	224	196	173	152	128	108	91	76	63
	18	500	500	498	415	352	303	263	231	205	183	164	149	135	116	93
	16	500	500	498	415	352	302	263	231	205	183	164	149	135	124	108
8.5	20	500	500	459	382	323	277	240	211	187	166	141	119	101	85	71
	18	500	500	500	447	379	325	283	249	220	197	177	160	146	129	111
	16	500	500	500	446	378	325	283	248	220	197	177	160	145	133	122
9	20	500	500	491	409	346	296	257	226	200	178	155	131	111	93	78
	18	500	500	500	478	405	348	303	266	236	211	189	171	156	141	122
	16	500	500	500	478	405	348	303	266	236	210	189	171	156	142	131
9.5	20	500	500	500	435	368	316	274	241	213	190	168	143	121	102	86
	18	500	500	500	500	432	371	323	284	251	224	202	183	166	152	133
	16	500	500	500	500	432	371	323	283	251	224	202	182	166	152	139

FOR SI: 1 ksi = 6.89 MPa, 1 pcf = 16.0 kg/m^3, 1 psf = 0.0479 kN/m^2, 1 inch = 25.4 mm, 1 foot = 304.8 mm, 1 in^2/foot = 59.27 mm^2/m

1. The maximum unshored span for the deck is shown in Table 3.29 of this report.
2. All loads are assumed to be statically applied.
3. The deflection limit of the composite slab is 1/360 of the span under the total load, which includes live load, the weight of concrete, and the weight of the deck.
4. Longitudinal and transverse reinforcement bars having a yield strength of at least 60 ksi or welded wire fabric shall be provided. The area of this reinforcement shall be equal to 0.00075 times the area of concrete above the steel deck but not less than 0.028 in^2 per foot of width.

TABLE 3.16 – Epicore 3.5 Allowable Uniform Load Capacity (psf) For Continuous Span Conditions[1,2,3,4,5]
fy = 40 ksi, Normal Weight Concrete (145 pcf) f'c = 3 ksi

Overall Slab Depth (inches)	Gage	Spans, Center to Center of Supports (ft)														
		14	15	16	17	18	19	20	21	22	23	24	25	26	27	28
5.5	20	213	179	152	130	111	95	81	69	52	-	-	-	-	-	-
	18	217	200	185	171	154	131	104	82	63	-	-	-	-	-	-
	16	217	199	184	170	158	147	119	94	74	57	-	-	-	-	-
6	20	238	205	174	149	127	109	94	80	69	58	-	-	-	-	-
	18	237	218	201	186	173	153	133	113	90	70	54	-	-	-	-
	16	236	217	200	185	172	161	150	129	103	82	64	-	-	-	-
6.5	20	257	232	198	169	145	124	107	92	79	68	58	-	-	-	-
	18	256	236	217	201	187	174	151	132	116	98	77	60	-	-	-
	16	255	235	217	201	186	174	162	152	139	112	90	71	55	-	-
7	20	276	254	222	190	163	140	121	104	90	77	66	56	-	-	-
	18	276	253	234	217	201	188	171	149	131	115	100	84	66	50	-
	16	275	253	233	216	200	187	174	163	153	144	121	98	78	61	-
7.5	20	296	272	247	211	182	157	135	117	101	87	75	64	54	-	-
	18	295	271	250	232	215	201	187	167	147	129	113	99	87	72	55
	16	294	270	249	231	214	200	187	175	164	154	145	129	105	85	67
8	20	315	290	267	234	201	174	150	130	112	97	84	72	61	52	-
	18	314	289	267	247	229	214	200	185	163	143	126	111	97	85	74
	16	314	288	266	246	229	213	199	186	174	164	154	145	134	112	91
8.5	20	322	296	273	253	221	191	165	143	124	107	93	80	68	58	-
	18	334	307	283	262	243	227	212	198	179	158	139	123	108	95	83
	16	333	306	282	261	243	226	211	197	185	174	164	154	145	133	118
9	20	330	303	279	258	240	209	181	157	136	118	102	88	76	65	55
	18	353	325	299	277	258	240	224	210	196	173	153	135	119	104	92
	16	352	324	299	276	257	239	223	209	196	184	173	163	154	145	130
9.5	20	337	309	285	263	244	227	197	171	148	129	112	97	83	71	61
	18	373	342	316	292	272	253	236	221	207	189	167	147	130	114	101
	16	372	341	315	292	271	252	235	220	207	194	182	172	162	153	142

FOR SI: 1 ksi = 6.89 MPa, 1 pcf = 16.0 kg/m^3, 1 psf = 0.0479 kN/m^2, 1 inch = 25.4 mm, 1 foot = 304.8 mm, 1 in^2/foot = 59.27 mm^2/m

1. The maximum unshored span for the deck is shown in Table 3.29 of this report.
2. All loads are assumed to be statically applied.
3. The deflection limit of the composite slab is 1/360 of the span under the total load, which includes the live load, the weight of concrete, and the weight of the deck.
4. Longitudinal and transverse reinforcement bars having a yield strength of at least 60 ksi or welded wire fabric shall be provided. The area of this reinforcement shall be equal to 0.00075 times the area of concrete above the steel deck but not less than 0.028 in^2 per foot of width.
5. Continuous span conditions are based on continuity over interior supports, which requires appropriate negative moment steel reinforcement.

TABLE 3.17 – Epicore 3.5A Allowable Uniform Load Capacity (psf) For Simple Span Conditions[1,2,3,4]
fy = 40 ksi, Normal Weight Concrete (145 pcf) f'c = 3 ksi

Overall Slab Depth (inches)	Gage	Spans, Center to Center of Supports (ft)														
		8	9	10	11	12	13	14	15	16	17	18	19	20	21	22
5.5	20	450	362	299	252	216	187	164	146	113	86	65	-	-	-	-
	18	500	434	363	310	269	237	207	160	123	95	72	54	-	-	-
	16	500	431	362	309	268	235	209	172	133	103	79	60	-	-	-
6	20	500	406	335	282	242	210	184	163	144	116	89	68	50	-	-
	18	500	486	407	348	301	265	235	206	162	126	98	75	56	-	-
	16	500	484	405	346	300	264	234	210	175	136	106	82	62	-	-
6.5	20	500	449	371	312	267	232	204	181	161	140	118	91	70	52	-
	18	500	500	451	385	334	273	261	234	200	164	128	100	77	59	-
	16	500	500	449	383	333	292	260	233	210	177	139	109	85	65	-
7	20	500	492	407	342	293	254	223	198	177	158	135	116	93	71	53
	18	500	500	494	422	366	322	286	256	225	193	165	130	102	79	60
	16	500	500	493	421	365	321	285	255	231	210	178	142	112	87	67
7.5	20	500	500	442	373	319	277	243	215	193	174	151	130	112	94	72
	18	500	500	500	459	399	350	311	279	250	215	186	162	131	104	81
	16	500	500	500	458	397	349	310	278	251	229	210	179	143	114	89
8	20	500	500	478	403	345	299	263	233	208	188	167	144	124	107	93
	18	500	500	500	497	431	379	336	302	273	238	206	179	156	132	105
	16	500	500	500	495	430	377	335	301	272	248	227	209	180	144	115
8.5	20	500	500	500	433	371	322	282	250	224	202	183	158	137	118	102
	18	500	500	500	500	463	407	362	324	293	262	227	197	172	150	131
	16	500	500	500	500	462	406	361	323	292	266	244	225	208	179	145
9	20	500	500	500	463	396	344	302	268	239	216	196	173	149	129	112
	18	500	500	500	500	496	435	387	347	314	285	247	215	187	164	143
	16	500	500	500	500	494	434	386	346	313	285	261	240	222	201	177
9.5	20	500	500	500	493	422	366	322	285	255	230	208	187	162	140	122
	18	500	500	500	500	500	464	412	370	334	304	268	233	204	178	156
	16	500	500	500	500	500	463	411	369	333	303	278	256	237	219	193

FOR SI: 1 ksi = 6.89 MPa, 1 pcf = 16.0 kg/m^3, 1 psf = 0.0479 kN/m^2, 1 inch = 25.4 mm, 1 foot = 304.8 mm, 1 in^2/foot = 59.27 mm^2/m

1. The maximum unshored span for the deck is shown in Table 3.30 of this report.
2. All loads are assumed to be statically applied.
3. The deflection limit of the composite slab is 1/360 of the span under the total load, which includes live load, the weight of concrete, and the weight of the deck.
4. Longitudinal and transverse reinforcement bars having a yield strength of at least 60 ksi or welded wire fabric shall be provided. The area of this reinforcement shall be equal to 0.00075 times the area of concrete above the steel deck but not less than 0.028 in^2 per foot of width.

TABLE 3.18 – Toris 4C Allowable Uniform Load Capacity (psf) For Simple Span Conditions[1,2,3,4]
fy = 40 ksi, Normal Weight Concrete (145 pcf) f'c = 3 ksi

Overall Slab Depth (inches)	Gage	Spans, Center to Center of Supports (ft)														
		12	13	14	15	16	17	18	19	20	21	22	23	24	25	26
6	20	209	180	149	124	103	86	66	-	-	-	-	-	-	-	-
	18	292	245	204	172	141	107	80	58	-	-	-	-	-	-	-
	16	291	253	222	197	160	123	93	69	50	-	-	-	-	-	-
6.5	20	233	201	170	141	118	98	82	68	-	-	-	-	-	-	-
	18	326	277	232	195	165	140	109	82	60	-	-	-	-	-	-
	16	325	282	248	220	197	162	125	95	71	52	-	-	-	-	-
7	20	257	222	191	159	133	111	93	78	65	-	-	-	-	-	-
	18	360	312	261	220	186	158	135	110	83	61	-	-	-	-	-
	16	359	312	274	243	217	196	163	126	97	73	53	-	-	-	-
7.5	20	282	242	211	179	149	125	105	88	73	61	50	-	-	-	-
	18	394	342	292	246	209	178	152	130	111	85	63	-	-	-	-
	16	393	341	300	266	238	214	194	163	128	99	75	55	-	-	-
8	20	306	263	229	199	167	140	118	99	83	69	57	-	-	-	-
	18	428	371	324	273	232	198	169	145	124	107	85	64	-	-	-
	16	427	371	326	289	258	233	211	193	163	129	100	76	56	-	-
8.5	20	330	284	248	218	184	155	131	110	92	77	64	53	-	-	-
	18	462	401	352	302	256	219	188	161	138	119	102	86	64	-	-
	16	461	400	352	312	279	251	228	208	186	162	129	101	77	57	-
9	20	355	305	266	234	202	170	144	121	102	86	71	59	-	-	-
	18	496	430	378	330	281	240	206	177	153	131	113	97	83	64	-
	16	495	430	378	335	300	270	245	224	205	179	156	129	101	78	58
9.5	20	379	326	284	250	221	186	157	133	112	94	79	65	54	-	-
	18	500	460	404	358	307	262	225	194	167	144	124	107	91	78	64
	16	500	459	403	358	320	288	262	239	219	196	171	150	128	101	78
10	20	403	347	302	266	236	202	171	145	123	103	87	72	59	-	-
	18	500	489	430	381	333	285	245	211	182	157	136	117	100	86	73
	16	500	489	429	381	341	307	279	254	233	213	187	163	143	125	101

FOR SI: 1 ksi = 6.89 MPa, 1 pcf = 16.0 kg/m^3, 1 psf = 0.0479 kN/m^2, 1 inch = 25.4 mm, 1 foot = 304.8 mm, 1 in^2/foot = 59.27 mm^2/m

1. The maximum unshored span for the deck is shown in Table 3.31 of this report.
2. All loads are assumed to be statically applied.
3. The deflection limit of the composite slab is 1/360 of the span under the total load, which includes the live load, the weight of concrete, and the weight of the deck.
4. Longitudinal and transverse reinforcement bars having a yield strength of at least 60 ksi or welded wire fabric shall be provided. The area of this reinforcement shall be equal to 0.00075 times the area of concrete above the steel deck but not less than 0.028 in^2 per foot of width.

TABLE 3.19 – Toris 4C Allowable Uniform Load Capacity (psf) For Continuous Span Conditions[1,2,3,4,5]
fy = 40 ksi, Normal Weight Concrete (145 pcf) f'c = 3 ksi

Overall Slab Depth (inches)	Gage	Spans, Center to Center of Supports (ft)														
		16	17	18	19	20	21	22	23	24	25	26	27	28	29	30
6	20	160	136	116	99	85	72	62	52	-	-	-	-	-	-	-
	18	202	187	162	140	122	106	84	65	50	-	-	-	-	-	-
	16	201	186	173	162	151	122	98	77	60	-	-	-	-	-	-
6.5	20	181	155	132	113	97	83	71	61	51	-	-	-	-	-	-
	18	218	202	184	159	139	121	105	91	72	55	-	-	-	-	-
	16	218	202	187	175	163	153	131	106	84	66	51	-	-	-	-
7	20	205	175	150	128	110	95	81	69	59	50	-	-	-	-	-
	18	235	218	202	180	157	137	120	104	91	78	60	-	-	-	-
	16	234	217	201	188	175	164	154	139	113	91	72	56	-	-	-
7.5	20	229	196	168	144	124	107	92	79	67	57	-	-	-	-	-
	18	251	233	216	202	176	154	135	118	103	90	79	66	50	-	-
	16	250	232	216	201	188	176	165	155	140	120	98	78	61	-	-
8	20	254	217	187	161	139	120	103	89	76	65	55	-	-	-	-
	18	268	248	230	215	196	172	151	132	116	101	89	77	67	54	-
	16	267	247	230	214	200	187	175	165	155	139	124	104	84	66	51
8.5	20	274	240	206	178	153	133	115	99	85	73	62	52	-	-	-
	18	284	263	245	228	213	190	167	147	129	113	99	87	76	66	57
	16	283	262	244	227	212	198	186	175	165	155	138	122	109	89	71
9	20	280	259	226	195	169	146	126	109	94	81	69	59	-	-	-
	18	300	278	259	241	225	209	184	162	142	125	110	96	84	73	64
	16	300	277	258	240	224	210	197	185	174	164	152	136	121	107	94
9.5	20	286	265	245	213	184	160	139	120	104	89	77	65	55	-	-
	18	317	293	273	254	237	222	201	177	156	137	121	106	93	81	71
	16	316	293	272	253	236	221	208	195	183	173	163	149	133	118	105
10	20	292	270	250	231	200	174	151	131	113	98	84	72	61	51	-
	18	333	309	287	267	250	234	219	193	170	150	132	116	102	90	78
	16	332	308	286	266	249	233	218	205	193	182	171	162	145	130	116

FOR SI: 1 ksi = 6.89 MPa, 1 pcf = 16.0 kg/m^3, 1 psf = 0.0479 kN/m^2, 1 inch = 25.4 mm, 1 foot = 304.8 mm, 1 in^2/foot = 59.27 mm^2/m

1. The maximum unshored span for the deck is shown in Table 3.31 of this report.
2. All loads are assumed to be statically applied.
3. The deflection limit of the composite slab is 1/360 of the span under the total load, which includes the live load, the weight of concrete, and the weight of the deck.
4. Longitudinal and transverse reinforcement bars having a yield strength of at least 60 ksi or welded wire fabric shall be provided. The area of this reinforcement shall be equal to 0.00075 times the area of concrete above the steel deck but not less than 0.028 in^2 per foot of width.
5. Continuous span conditions are based on continuity over interior supports, which requires appropriate negative moment steel reinforcement.

TABLE 3.20 – Toris 4CA Allowable Uniform Load Capacity (psf) For Simple Span Conditions[1,2,3,4]
fy = 40 ksi, Normal Weight Concrete (145 pcf) f'c = 3 ksi

Overall Slab Depth (inches)	Gage	Spans, Center to Center of Supports (ft)														
		12	13	14	15	16	17	18	19	20	21	22	23	24	25	26
6	20	221	193	170	144	122	104	136	72	55	-	-	-	-	-	-
	18	274	241	211	179	153	128	101	78	60	-	-	-	-	-	-
	16	274	241	215	193	175	138	109	85	66	50	-	-	-	-	-
6.5	20	247	216	191	165	140	119	102	87	73	56	-	-	-	-	-
	18	306	269	240	204	174	150	129	102	80	62	-	-	-	-	-
	16	306	269	240	215	195	176	140	111	87	67	51	-	-	-	-
7	20	273	239	211	187	159	135	116	99	85	73	56	-	-	-	-
	18	338	297	265	231	197	170	147	127	103	81	62	-	-	-	-
	16	338	297	265	238	216	197	176	141	112	88	69	52	-	-	-
7.5	20	299	261	231	206	178	152	131	112	96	83	71	56	-	-	-
	18	370	326	290	259	222	191	165	143	124	104	81	63	-	-	-
	16	370	326	290	261	236	215	198	175	141	113	89	70	53	-	-
8	20	325	284	251	224	199	170	146	125	108	93	80	69	56	-	-
	18	402	354	315	283	247	213	184	159	139	121	103	82	63	-	-
	16	402	354	315	283	257	234	215	195	171	141	113	90	70	54	-
8.5	20	351	307	271	242	218	188	162	139	120	103	89	76	65	55	-
	18	434	382	340	306	273	235	204	177	154	134	117	102	81	63	-
	16	434	382	340	306	277	253	232	214	189	166	141	113	90	70	54
9	20	377	329	291	260	234	207	178	153	132	114	98	85	73	62	53
	18	466	410	365	328	297	259	224	194	169	148	129	113	98	81	62
	16	466	410	365	328	297	271	249	230	209	183	161	140	113	90	70
9.5	20	402	352	311	278	250	226	194	168	145	125	108	93	80	68	58
	18	498	439	391	351	318	282	245	213	185	162	141	123	108	94	80
	16	498	439	391	351	318	290	266	246	228	201	177	156	137	112	89
10	20	402	352	311	278	250	226	194	168	145	125	108	93	80	68	58
	18	498	439	391	351	318	282	245	213	185	162	141	123	108	94	80
	16	498	439	391	351	318	290	266	246	228	201	177	156	137	112	89

FOR SI: 1 ksi = 6.89 MPa, 1 pcf = 16.0 kg/m^3, 1 psf = 0.0479 kN/m^2, 1 inch = 25.4 mm, 1 foot = 304.8 mm, 1 in^2/foot = 59.27 mm^2/m

1. The maximum unshored span for the deck is shown in Table 3.32 of this report.
2. All loads are assumed to be statically applied.
3. The deflection limit of the composite slab is 1/360 of the span under the total load, which includes the live load, the weight of concrete, and the weight of the deck.
4. Longitudinal and transverse reinforcement bars having a yield strength of at least 60 ksi or welded wire fabric shall be provided. The area of this reinforcement shall be equal to 0.00075 times the area of concrete above the steel deck but not less than 0.028 in^2 per foot of width.

TABLE 3.21 – EPICORE MSR Allowable Uniform Load Capacity (psf) For Simple Span Conditions[1,2,3,4,5]
F_y = 50 ksi, Normal Weight Concrete (150 pcf) f'_c = 4 ksi

Overall Slab Depth (in.)	Gage	Load	Spans, Center to Center of Supports (ft)																
			6	7	8	9	10	11	12	13	14	15	16	17	18	19	20	21	22
4	22	W	500	500	398	306	241	193	156	127	105	-	-	-	-	-	-	-	-
		L/360	500	500	500	364	252	177	125	88	60	-	-	-	-	-	-	-	-
	20	W	500	500	481	372	294	236	193	159	132	-	-	-	-	-	-	-	-
		L/360	500	500	500	392	272	192	136	96	67	-	-	-	-	-	-	-	-
4.5	22	W	500	500	463	357	281	225	182	149	123	102	-	-	-	-	-	-	-
		L/360	500	500	500	500	361	257	185	134	96	67	-	-	-	-	-	-	-
	20	W	500	500	500	434	343	276	225	186	154	129	108	-	-	-	-	-	-
		L/360	500	500	500	500	388	277	200	146	105	75	52	-	-	-	-	-	-
5	22	W	500	500	500	409	322	258	210	172	142	117	97	81	-	-	-	-	-
		L/360	500	500	500	500	495	356	260	191	141	103	74	51	-	-	-	-	-
	20	W	500	500	500	497	394	317	259	214	178	149	125	105	-	-	-	-	-
		L/360	500	500	500	500	500	382	280	207	153	113	82	58	-	-	-	-	-
5.5	22	W	500	500	500	461	364	292	237	194	160	133	111	92	77	-	-	-	-
		L/360	500	500	500	500	500	475	350	261	195	146	108	79	56	-	-	-	-
	20	W	500	500	500	500	445	359	293	242	202	169	142	120	101	-	-	-	-
		L/360	500	500	500	500	500	500	376	281	211	159	119	87	63	-	-	-	-
6	22	W	500	500	500	500	406	326	265	217	180	149	124	104	86	72	-	-	-
		L/360	500	500	500	500	500	500	458	344	261	198	150	113	83	59	-	-	-
	20	W	500	500	500	500	496	400	327	271	226	189	159	135	114	97	-	-	-
		L/360	500	500	500	500	500	500	490	369	281	214	163	123	92	67	-	-	-
6.5	22	W	500	500	500	500	449	360	293	241	199	166	138	115	96	80	66	-	-
		L/360	500	500	500	500	500	500	500	442	338	259	199	153	116	86	63	-	-
	20	W	500	500	500	500	500	443	362	300	250	210	177	150	127	108	91	77	-
		L/360	500	500	500	500	500	500	500	472	362	279	215	166	127	96	70	50	-
7	22	W	500	500	500	500	491	395	321	264	219	182	152	127	106	89	74	61	-
		L/360	500	500	500	500	500	500	500	500	427	331	257	200	155	118	89	65	-
	20	W	500	500	500	500	500	485	397	329	274	231	195	165	140	119	101	85	72
		L/360	500	500	500	500	500	500	500	500	456	354	277	216	168	130	99	73	52
7.5	22	W	500	500	500	500	500	429	350	287	238	198	166	139	116	97	81	67	-
		L/360	500	500	500	500	500	500	500	500	500	413	324	254	200	156	120	91	-
	20	W	500	500	500	500	500	500	433	358	299	251	212	180	153	130	111	94	79
		L/360	500	500	500	500	500	500	500	500	500	441	347	273	215	169	132	101	75
8	22	W	500	500	500	500	500	464	378	311	258	215	180	151	126	106	88	73	60
		L/360	500	500	500	500	500	500	500	500	500	500	400	317	251	198	156	121	92
	20	W	500	500	500	500	500	500	468	388	324	272	230	195	166	141	120	102	86
		L/360	500	500	500	500	500	500	500	500	500	500	426	339	270	214	169	133	102

FOR SI: 1 ksi = 6.89 MPa, 1 pcf = 16.0 kg/m^3, 1 psf = 0.0479 kN/m^2, 1 inch = 25.4 mm, 1 foot = 304.8 mm, 1 in^2/foot = 59.27 mm^2/m

1. The maximum unshored span for the deck is shown in Table 3.33 of this report.
2. All loads are assumed to be statically applied.
3. W is the least value of the moment, vertical shear, or shear bond. These values may be multiplied by 1.6 to obtain the factored load capacity.
4. Deflection limit of the composite slab is 1/360 of the span under the total load, which includes the live load, the weight of concrete, and the weight of the deck.
5. Longitudinal and transverse reinforcement bars having a yield strength of at least 60 ksi or welded wire fabric shall be provided. The area of this reinforcement shall be equal to 0.00075 times the area of concrete above the steel deck but not less than 0.028 in^2 per foot of width.

TABLE 3.22 – EPICORE MSR Allowable Uniform Load Capacity (psf) For Continuous Span Conditions[1,2,3,4,5,6]
F_y = 50 ksi, Normal Weight Concrete (150 pcf) f'_c = 4 ksi

Overall Slab Depth (in.)	Gage	Load	Spans, Center to Center of Supports (ft)																
			12	13	14	15	16	17	18	19	20	21	22	23	24	25	26	27	28
4	22	W	229	189	158	133	112	95	-	-	-	-	-	-	-	-	-	-	-
		L/360	279	209	157	119	89	66	-	-	-	-	-	-	-	-	-	-	-
	20	W	279	232	195	165	140	120	103	-	-	-	-	-	-	-	-	-	-
		L/360	301	226	171	130	98	73	54	-	-	-	-	-	-	-	-	-	-
4.5	22	W	267	221	185	156	132	112	95	81	-	-	-	-	-	-	-	-	-
		L/360	398	301	230	177	136	104	79	58	-	-	-	-	-	-	-	-	-
	20	W	326	271	228	193	165	141	121	104	-	-	-	-	-	-	-	-	-
		L/360	428	324	248	191	148	114	87	65	-	-	-	-	-	-	-	-	-
5	22	W	306	254	212	179	151	129	110	94	80	68	-	-	-	-	-	-	-
		L/360	500	415	320	248	194	151	118	91	69	51	-	-	-	-	-	-	-
	20	W	374	311	262	222	190	163	140	121	104	90	-	-	-	-	-	-	-
		L/360	500	445	344	268	210	164	128	100	77	58	-	-	-	-	-	-	-
5.5	22	W	345	287	240	202	172	146	125	107	91	78	67	-	-	-	-	-	-
		L/360	500	500	429	336	264	209	165	130	102	79	59	-	-	-	-	-	-
	20	W	375	343	297	252	215	184	159	137	119	103	89	77	-	-	-	-	-
		L/360	500	500	459	360	285	226	179	142	112	87	67	50	-	-	-	-	-
6	22	W	358	320	268	226	192	164	140	120	103	88	75	64	54	-	-	-	-
		L/360	500	500	500	439	349	278	223	178	142	112	88	68	51	-	-	-	-
	20	W	392	357	328	281	240	207	178	154	134	116	101	87	75	-	-	-	-
		L/360	500	500	500	470	374	299	240	193	155	123	97	76	58	-	-	-	-
6.5	22	W	375	341	296	250	213	181	155	133	114	98	84	72	61	51	-	-	-
		L/360	500	500	500	500	448	360	290	235	190	153	122	97	75	57	-	-	-
	20	W	408	372	341	311	266	229	198	171	148	129	112	97	84	73	-	-	-
		L/360	500	500	500	500	478	385	312	253	205	166	134	107	84	65	-	-	-
7	22	W	391	356	325	275	234	199	171	147	126	108	93	79	67	57	-	-	-
		L/360	500	500	500	500	500	454	369	300	245	200	162	131	105	83	-	-	-
	20	W	425	387	355	327	292	251	217	188	163	142	124	107	93	81	70	60	-
		L/360	500	500	500	500	500	485	394	322	264	216	176	143	116	92	72	55	-
7.5	22	W	407	371	339	299	254	217	186	160	138	118	101	87	74	63	53	-	-
		L/360	500	500	500	500	500	500	459	376	309	254	209	171	139	113	90	-	-
	20	W	441	402	368	339	313	274	237	205	178	155	135	118	102	89	77	66	56
		L/360	500	500	500	500	500	500	489	402	331	273	225	185	152	124	99	79	61
8	22	W	424	386	353	324	275	235	202	174	149	128	110	95	81	69	58	-	-
		L/360	500	500	500	500	500	500	500	462	382	316	262	217	179	147	119	-	-
	20	W	458	417	382	351	325	297	257	223	194	169	147	128	111	97	84	72	62
		L/360	500	500	500	500	500	500	500	492	408	339	281	234	194	160	131	106	85

FOR SI: 1 ksi = 6.89 MPa, 1 pcf = 16.0 kg/m^3, 1 psf = 0.0479 kN/m^2, 1 inch = 25.4 mm, 1 foot = 304.8 mm, 1 in^2/foot = 59.27 mm^2/m

1. The maximum unshored span for the deck is shown in Table 3.33 of this report.
2. All loads are assumed to be statically applied.
3. W is the least value of the moment, vertical shear, or shear bond. These values can be multiplied by 1.6 to obtain the factored load capacity.
4. Deflection limit of the composite slab is 1/360 of the span under the total load, which includes the live load, the weight of concrete, and the weight of the deck.
5. Longitudinal and transverse reinforcement bars having a yield strength of at least 60 ksi or welded wire fabric shall be provided. The area of this reinforcement shall be equal to 0.00075 times the area of concrete above the steel deck but not less than 0.028 in^2 per foot of width.
6. Continuous span conditions are based on continuity over interior supports, which requires appropriate negative moment steel reinforcement.

TABLE 3.23 – EPICORE MSR Allowable Uniform Load Capacity (psf) For Simple Span Conditions[1,2,3,4,5]
F_y = 50 ksi, Lightweight Concrete (110 pcf) f'_c = 4 ksi

Overall Slab Depth (in.)	Gage	Load	Spans, Center to Center of Supports (ft)														
			6	7	8	9	10	11	12	13	14	15	16	17	18	19	20
4	22	W	500	500	377	286	221	175	140	114	-	-	-	-	-	-	-
		L/360	500	500	400	270	187	131	93	65	-	-	-	-	-	-	-
	20	W	500	500	376	285	221	175	140	113	93	-	-	-	-	-	-
		L/360	500	500	433	293	203	144	102	72	50	-	-	-	-	-	-
4.5	22	W	500	500	430	326	253	200	160	130	106	87	-	-	-	-	-
		L/360	500	500	500	381	266	190	136	98	71	50	-	-	-	-	-
	20	W	500	500	430	326	253	199	160	130	106	87	-	-	-	-	-
		L/360	500	500	500	412	289	206	149	108	78	56	-	-	-	-	-
5	22	W	500	500	484	367	284	224	180	146	119	98	81	-	-	-	-
		L/360	500	500	500	500	363	261	191	140	103	75	54	-	-	-	-
	20	W	500	500	483	366	284	224	180	146	119	98	81	-	-	-	-
		L/360	500	500	500	500	393	284	208	153	113	83	61	-	-	-	-
5.5	22	W	500	500	500	407	316	249	200	162	132	109	90	75	-	-	-
		L/360	500	500	500	500	480	348	256	191	143	106	79	57	-	-	-
	20	W	500	500	500	407	315	249	200	162	132	109	90	75	-	-	-
		L/360	500	500	500	500	500	376	278	208	156	117	88	64	-	-	-
6	22	W	500	500	500	448	347	274	220	178	146	120	99	83	69	-	-
		L/360	500	500	500	500	500	450	334	251	190	144	109	81	60	-	-
	20	W	500	500	500	447	347	274	219	178	145	120	99	83	69	-	-
		L/360	500	500	500	500	500	485	361	272	206	157	120	91	68	-	-
6.5	22	W	500	500	500	488	378	299	239	194	159	131	108	90	75	63	-
		L/360	500	500	500	500	500	500	424	321	245	188	144	110	83	62	-
	20	W	500	500	500	488	378	299	239	194	159	131	108	90	75	63	-
		L/360	500	500	500	500	500	500	457	347	265	205	158	122	93	70	-
7	22	W	500	500	500	500	410	324	259	210	172	142	117	98	81	68	57
		L/360	500	500	500	500	500	500	500	401	308	239	185	144	111	85	63
	20	W	500	500	500	500	410	323	259	210	172	142	117	98	81	68	57
		L/360	500	500	500	500	500	500	500	433	333	259	202	158	122	94	72
7.5	22	W	500	500	500	500	441	348	279	226	185	153	126	105	88	73	61
		L/360	500	500	500	500	500	500	500	493	381	297	232	182	143	111	85
	20	W	500	500	500	500	441	348	279	226	185	152	126	105	88	73	61
		L/360	500	500	500	500	500	500	500	500	411	321	252	199	156	123	95
8	22	W	500	500	500	500	473	373	299	242	198	163	135	113	94	79	66
		L/360	500	500	500	500	500	500	500	500	463	363	286	226	179	141	110
	20	W	500	500	500	500	472	373	299	242	198	163	135	113	94	78	66
		L/360	500	500	500	500	500	500	500	500	499	391	309	246	195	155	122

FOR SI: 1 ksi = 6.89 MPa, 1 pcf = 16.0 kg/m^3, 1 psf = 0.0479 kN/m^2, 1 inch = 25.4 mm, 1 foot = 304.8 mm, 1 in^2/foot = 59.27 mm^2/m

1. The maximum unshored span for the deck is shown in Table 3.34 of this report.
2. All loads are assumed to be statically applied.
3. W is the least value of the moment, vertical shear, or shear bond. These values may be multiplied by 1.6 to obtain the factored load capacity.
4. The deflection limit of the composite slab is 1/360 of the span under the total load, which includes the live load, the weight of concrete, and the weight of the deck.
5. Longitudinal and transverse reinforcement bars having a yield strength of at least 60 ksi or welded wire fabric shall be provided. The area of this reinforcement shall be equal to 0.00075 times the area of concrete above the steel deck but not less than 0.028 in^2 per foot of width.

TABLE 3.24 – EPICORE MSR Allowable Uniform Load Capacity (psf) For Continuous Span Conditions[1,2,3,4,5,6]
F_y = 50 ksi, Lightweight Concrete (110 pcf) f'_c = 4 ksi

Overall Slab Depth (in.)	Gage	Load	Spans, Center to Center of Supports (ft)																
			12	13	14	15	16	17	18	19	20	21	22	23	24	25	26	27	28
4	22	W	228	190	160	136	116	-	-	-	-	-	-	-	-	-	-	-	-
		L/360	207	155	117	88	66	-	-	-	-	-	-	-	-	-	-	-	-
	20	W	276	231	195	166	143	123	-	-	-	-	-	-	-	-	-	-	-
		L/360	225	169	128	97	73	55	-	-	-	-	-	-	-	-	-	-	-
4.5	22	W	266	222	187	159	136	117	101	-	-	-	-	-	-	-	-	-	-
		L/360	294	222	170	130	100	76	58	-	-	-	-	-	-	-	-	-	-
	20	W	306	270	229	195	168	145	126	-	-	-	-	-	-	-	-	-	-
		L/360	319	242	185	143	110	85	65	-	-	-	-	-	-	-	-	-	-
5	22	W	284	255	215	183	157	135	117	101	88	-	-	-	-	-	-	-	-
		L/360	400	305	235	182	142	111	86	66	50	-	-	-	-	-	-	-	-
	20	W	318	291	263	224	193	167	145	127	111	-	-	-	-	-	-	-	-
		L/360	433	330	255	199	155	122	95	74	57	-	-	-	-	-	-	-	-
5.5	22	W	297	271	244	208	178	153	132	115	100	87	-	-	-	-	-	-	-
		L/360	500	404	313	245	193	153	121	95	74	57	-	-	-	-	-	-	-
	20	W	331	302	278	254	219	190	165	144	126	111	-	-	-	-	-	-	-
		L/360	500	437	339	266	210	167	132	105	83	64	-	-	-	-	-	-	-
6	22	W	309	282	259	232	199	172	149	129	112	98	86	-	-	-	-	-	-
		L/360	500	500	406	320	254	202	162	129	103	81	64	-	-	-	-	-	-
	20	W	343	313	288	266	245	212	185	162	142	125	110	97	-	-	-	-	-
		L/360	500	500	438	346	275	220	177	142	114	91	71	56	-	-	-	-	-
6.5	22	W	322	293	269	248	221	190	165	143	125	109	95	83	73	-	-	-	-
		L/360	500	500	500	407	325	261	210	170	137	110	88	69	54	-	-	-	-
	20	W	356	325	298	275	255	236	205	179	158	139	122	108	96	-	-	-	-
		L/360	500	500	500	439	351	283	228	185	150	121	98	78	61	-	-	-	-
7	22	W	334	305	279	258	238	209	181	158	138	120	105	92	81	71	-	-	-
		L/360	500	500	500	500	406	328	266	217	176	144	116	94	75	59	-	-	-
	20	W	368	336	308	285	264	245	226	197	173	153	135	119	106	93	83	-	-
		L/360	500	500	500	500	438	354	288	235	192	157	128	104	84	67	52	-	-
7.5	22	W	346	316	290	267	247	228	198	172	150	131	115	101	88	77	68	-	-
		L/360	500	500	500	500	499	405	330	270	222	182	149	122	99	80	63	-	-
	20	W	380	347	319	294	272	253	236	216	189	167	148	131	116	102	91	80	-
		L/360	500	500	500	500	500	436	356	293	241	199	164	135	110	89	72	57	-
8	22	W	359	327	300	276	255	237	214	187	163	143	125	110	96	84	74	64	56
		L/360	500	500	500	500	500	492	402	331	273	226	187	154	127	104	84	67	53
	20	W	393	358	329	303	281	261	243	228	206	181	160	142	126	112	99	88	78
		L/360	500	500	500	500	500	500	434	358	296	246	204	169	140	115	94	76	61

FOR SI: 1 ksi = 6.89 MPa, 1 pcf = 16.0 kg/m^3, 1 psf = 0.0479 kN/m^2, 1 inch = 25.4 mm, 1 foot = 304.8 mm, 1 in^2/foot = 59.27 mm^2/m

1. The maximum unshored span for the deck is shown in Table 3.34 of this report.
2. All loads are assumed to be statically applied.
3. W is the least value of the moment, vertical shear, or shear bond. These values can be multiplied by 1.6 to obtain the factored load capacity.
4. The deflection limit of the composite slab is 1/360 of the span under the total load, which includes the live load, the weight of concrete, and the weight of the deck.
5. Longitudinal and transverse reinforcement bars having a yield strength of at least 60 ksi or welded wire fabric shall be provided. The area of this reinforcement shall be equal to 0.00075 times the area of concrete above the steel deck but not less than 0.028 in^2 per foot of width.
6. Continuous span conditions are based on continuity over interior supports, which requires appropriate negative moment steel reinforcement.

Notes for Tables 3.25 through 3.32

For SI: 1 inch = 25.4 mm, 1 foot = 304.8 mm, 1 psf = 4.88 kg/mm^2, 1 psi = 6.89 kPa, 1 pcf = 16.02 kg/m^3

1. Runways and planking shall be used for all concrete placement.
2. Slab weights are approximate, ± 2 psf, and include deck weight
3. Applies to normal-weight concrete (145 pcf) with a minimum f'_c of 3,000 psi.
4. The minimum bearing length is 2" at end supports and 4" at interior supports.
5. Construction live loads: Uniform = 20 psf, Concentrated = 150 lbs per foot of width
6. Values are based on LRFD design.
7. Overall slab depth refers to the nominal concrete depth measured from the top of the concrete to the bottom of the steel deck.

TABLE 3.25 - Epicore Maximum Unshored Clear Spans

Span	Overall Slab Depth (in.)	4	4.5	5	5.5	6	6.5	7	7.5	8
	Slab Weight (pcf)	49	55	61	67	73	79	85	91	97
	Deck Type									
Simple	Epicore-22	7'-2"	6'-10"	6'-7"	6'-4"	6'-2"	5'-11'	5'-9"	5'-7"	5'-6"
	Epicore-20	8'-3"	7'-11"	7'-7"	7'-4"	7'-1"	6'-10"	6'-7"	6'-5"	6'-3"
	Epicore-18	10'-1"	9'-7"	9'-2"	8'-10"	8'-6"	8'-3"	8'-0"	7'-9"	7'-6"
	Epicore-16	11'-2"	10'-9"	10'-5"	10'-1"	9'-8"	9'-4"	9'-1"	8'-10"	8'-7"
2	Epicore-22	7'-10"	7'-6"	7'-3"	6'-11"	6'-8"	6'-6"	6'-3"	6'-1"	5'-11"
	Epicore-20	8'-9"	8'-4"	8'-0"	7'-8"	7'-5"	7'-2"	7'-0"	6'-9"	6'-7"
	Epicore-18	10'-3"	9'-9"	9'-5"	9'-0"	8'-9"	8'-5"	8'-2"	7'-11"	7'-9"
	Epicore-16	11'-9"	11'-3"	10'-9"	10'-4"	10'-0"	9'-8"	9'-5"	9'-1"	8'-10"
3 or more	Epicore-22	8'-2"	7'-9"	7'-5"	7'-2"	6'-11"	6'-8"	6'-6"	6'-4"	6'-1"
	Epicore-20	9'-0"	8'-8"	8'-3"	8'-0"	7'-8"	7'-5"	7'-2"	7'-0"	6'-10"
	Epicore-18	10'-7"	10'-1"	9'-9"	9'-4"	9'-0"	8'-9"	8'-6"	8'-3"	8'-0"
	Epicore-16	12'-1"	11'-7"	11'-2"	10'-9"	10'-4"	10'-0"	9'-8"	9'-5"	9'-2"

TABLE 3.26 - Epicore A Maximum Unshored Clear Spans

Span	Overall Slab Depth (in.)	4	4.5	5	5.5	6	6.5	7	7.5	8
	Slab Weight (pcf)	39	45	51	57	63	70	76	82	88
	Deck Type									
Simple	Epicore A-20	11'-0"	10'-4"	9'-10"	9'-5"	9'-0"	8'-8"	8'-4"	8'-1"	7'-10"
	Epicore A-18	11'-10"	11'-5"	11'-0"	10'-7"	10'-2"	9'-11"	9'-7"	9'-3"	9'-0"
	Epicore A-16	12'-4"	11'-11"	11'-7"	11'-3"	10'-10"	10'-6"	10'-3"	10'-0"	9'-9"
2	Epicore A-20	9'-10"	9'-4"	8'-11"	8'-6"	8'-2"	7'-10"	7'-7"	7'-4"	7'-2"
	Epicore A-18	11'-3"	10'-8"	10'-2"	9'-9"	9'-4"	9'-0"	8'-8"	8'-5"	8'-2"
	Epicore A-16	12'-8"	12'-0"	11'-6"	11'-0"	10'-7"	10'-2"	9'-10"	9'-6"	9'-3"
3 or more	Epicore A-20	10'-2"	9'-8"	9'-2"	8'-10"	8'-5"	8'-2"	7'-10"	7'-7"	7'-5"
	Epicore A-18	11'-7"	11'-0"	10'-6"	10'-1"	9'-8"	9'-4"	9'-0"	8'-9"	8'-5"
	Epicore A-16	13'-1"	12'-5"	11'-10"	11'-4"	10'-11"	10'-6"	10'-2"	9'-10"	9'-7"

TABLE 3.27 - Toris C Maximum Unshored Clear Spans

Span	Overall Slab Depth (in.)	4.5	5	5.5	6	6.5	7	7.5	8	8.5
	Slab Weight (pcf)	54	60	66	72	78	84	90	96	102
	Deck Type									
Simple	Toris C-20	9’-10”	9’-5”	9’-1”	8’-9”	8’-5”	8’-2”	7’-11”	7’-9”	7’-6”
	Toris C-18	11’-8”	11’-2”	10’-8”	10’-3”	9’-11”	9’-7”	9’-4”	9’-1”	8’-10”
	Toris C-16	12’-5”	12’-1”	11’-10”	11’-7”	11’-4”	10’-11”	10’-7”	10’-4”	10’-0”
2	Toris C-20	10’-1”	9’-8”	9’-3”	8’-11”	8’-8”	8’-5”	8’-2”	7’-11”	7’-8”
	Toris C-18	11’-8”	11’-2”	10’-9”	10’-5”	10’-1”	9’-9”	9’-6”	9’-3”	9’-0"
	Toris C-16	13’-3”	12’-8”	12’-3”	11’-10”	11’-5”	11’-1”	10’-9”	10’-6”	10’-2”
3 or more	Toris C-20	10’-5”	9’-11”	9’-7”	9’-3”	8’-11”	8’-8”	8’-5”	8’-2”	8’-0”
	Toris C-18	12’-1”	11’-7”	11’-2”	10’-9”	10’-5”	10’-1”	9’-9”	9’-6”	9’-3”
	Toris C-16	13’-8”	13’-2”	12’-8”	12’-2”	11’-10”	11’-5”	11’-1”	10’-10”	10’-6”

TABLE 3.28 - Toris CA Maximum Unshored Clear Spans

Span	Overall Slab Depth (in.)	4.5	5	5.5	6	6.5	7	7.5	8	8.5
	Slab Weight (pcf)	39	46	52	58	64	70	76	82	88
	Deck Type									
Simple	Toris CA-20	12’-8”	12’-3”	11’-10”	11’-5”	10’-11”	10’-6”	10’-2”	9’-9”	9’-6”
	Toris CA-18	13’-4”	12’-10”	12’-6”	12’-1”	11’-10”	11’-7”	11’-4”	11’-0”	10’-9”
	Toris CA-16	13’-11”	13’-5”	13’-0”	12’-8”	12’-4”	12’-1”	11’-10”	11’-7”	11’-5”
2	Toris CA-20	11’-7”	11’-0”	10’-6”	10’-0”	9’-8”	9’-4”	9’-0”	8’-8”	8’-5”
	Toris CA-18	13’-3”	12’-7”	12’-0”	11’-6”	11’-1”	10’-8”	10’-4”	10’-0”	9’-8”
	Toris CA-16	14’-11”	14’-2”	13’-6”	12’-11”	12’-5”	12’-0”	11’-7”	11’-3”	10’-11”
3 or more	Toris CA-20	12’-0”	11’-4”	10’-10”	10’-5”	10’-0”	9’-7”	9’-3”	9’-0”	8’-9”
	Toris CA-18	13’-9”	13’-0”	12’-5”	11’-11”	11’-5”	11’-0”	10’-8”	10’-4”	10’-0”
	Toris CA-16	15’-5”	14’-8”	14’-0”	13’-5”	12’-10”	12’-5”	12’-0”	11’-7”	11’-3”

TABLE 3.29 - Epicore 3.5 Maximum Unshored Clear Spans

Span	Overall Slab Depth (in.)	5.5	6	6.5	7	7.5	8	8.5	9	9.5
	Slab Weight (pcf)	62	68	74	80	86	92	98	104	110
	Deck Type									
Simple	Epicore 3.5-20	11’-7”	11’-1”	10’-8”	10’-4”	10’-0”	9’-8”	9’-5”	9’-2”	8’-11”
	Epicore 3.5-18	14’-2”	13’-9”	13’-2”	12’-9”	12’-4”	11’-11”	11’-7”	11’-4”	11’-0”
	Epicore 3.5-16	15’-0”	14’-8”	14’-4”	14’-1”	13’-10”	13’-7”	13’-4”	13’-2”	12’-11”
2	Epicore 3.5-20	12’-11”	12’-6”	12’-0”	11’-8”	11’-3”	11’-0”	10’-5”	9’-11”	9’-5”
	Epicore 3.5-18	15’-0”	14’-5”	14’-0”	13’-6”	13’-1”	12’-9”	12’-5”	12’-1”	11’-9”
	Epicore 3.5-16	16’-11”	16’-3”	15’-9”	15’-3”	14’-9”	14’-4”	14’-0”	13’-7”	13’-3”
3 or more	Epicore 3.5-20	13’-5”	12’-11”	12’-5”	12’-0”	11’-8”	11’-4”	11’-0”	10’-8”	10’-5”
	Epicore 3.5-18	15’-6”	14’-11”	14’-5”	14’-0”	13’-7”	13’-2”	12’-10”	12’-6”	12’-2”
	Epicore 3.5-16	17’-6”	16’-10”	16’-3”	15’-9”	15’-3”	14’-10”	14’-5”	14’-1”	13’-9”

TABLE 3.30 - Epicore 3.5A Maximum Unshored Clear Spans

Span	Overall Slab Depth (in.)	5.5	6	6.5	7	7.5	8	8.5	9	9.5
	Slab Weight (pcf)	49	55	61	67	73	80	86	92	98
	Deck Type									
Simple	Epicore 3.5A-20	13’-6”	12’-9”	12’-3”	11’-9”	11’-3”	10’-11”	10’-6”	10’-2”	9’-11”
	Epicore 3.5A-18	15’-3”	14’-10”	14’-5”	14’-1”	13’-9”	13’-4”	12’-10”	12’-6’	12’-1”
	Epicore 3.5A-16	16’-0”	15’-7”	15’-2”	14’-10”	14’-6”	14’-3”	14’-0”	13’-9”	13’-6”
2	Epicore 3.5A-20	14’-5”	13’-9”	13’-2”	12’-8”	12’-3”	11’-10”	11’-6”	11’-0”	10’-5”
	Epicore 3.5A-18	16’-5”	15’-8”	15’-0”	14’-6”	14’-0”	13’-6”	13’-1”	12’-9”	12’-5”
	Epicore 3.5A-16	18’-4”	17’-6”	16’-10”	16’-2”	115’-8”	15’-2”	14’-8”	14’-3”	13’-11”
3 or more	Epicore 3.5A-20	14’-10”	14’-2”	13’-8”	13’-1”	12’-8”	12’-3”	11’-10”	11’-6”	11’-2”
	Epicore 3.5A-18	16’-11”	16’-2”	15’-6”	14’-11”	14’-5”	14’-0”	13’-7”	13’-2”	12’-10”
	Epicore 3.5A-16	18’-9”	18’-1”	17’-5”	16’-9”	16’-2”	15’-8”	15’-2”	14’-9”	14’-4”

TABLE 3.31 - Toris 4C Maximum Unshored Clear Spans

Span	Overall Slab Depth (in.)	6	6.5	7	7.5	8	8.5	9	9.5	10
	Slab Weight (pcf)	67	73	79	85	91	97	103	109	115
	Deck Type									
Simple	Toris 4C-20	11’-11”	11’-6”	11’-1”	10’-9”	10’-5”	10’-1”	9’-10”	9’-7”	9’-4”
	Toris 4C-18	15’-1”	14’-9”	14’-5”	13’-11”	13’-6”	13’-1”	12’-9”	12’-5”	12’-1”
	Toris 4C-16	18’-5”	17’-9”	17’-3”	16’-8”	16’-3”	15’-9”	15’-4”	15’-0”	14’-8”
2	Toris 4C-20	12’-8”	12’-2”	11’-10”	11’-5”	11’-1”	10’-6”	10’-0”	9’-6”	9’-1”
	Toris 4C-18	15’-6”	14’-11”	14’-6”	14’-0”	13’-7”	13’-3”	12’-11”	12’-7”	12’-3”
	Toris 4C-16	17’-10”	17’-2”	16’-8”	16’-2”	15’-8”	15’-3”	14’-10”	14’-6”	14’-2”
3 or more	Toris 4C-20	13’-1”	12’-7”	12’-2”	11’-10”	11’-6”	11’-2”	10’-10”	10’-7”	10’-4”
	Toris 4C-18	16’-0”	15’-5”	14’-11”	14’-6”	14’-1”	13’-8”	13’-4”	13’-0”	12’-8”
	Toris 4C-16	18’-5”	17’-9”	17’-3”	16’-8”	16’-3”	15’-9”	15’-4”	15’-0”	14’-8”

TABLE 3.32 - Toris 4CA Maximum Unshored Clear Spans

Span	Overall Slab Depth (in.)	6	6.5	7	7.5	8	8.5	9	9.5	10
	Slab Weight (pcf)	50	56	62	68	74	80	86	92	98
	Deck Type									
Simple	Toris 4CA-20	14’-9”	14’-0”	13’-5”	12’-10”	12’-4”	11’-11”	11’-6”	11’-2”	10’-10”
	Toris 4CA-18	16’-4”	15’-10”	15’-5”	15’-1”	14’-9”	14’-6”	14’-2”	13’-11”	13’-6”
	Toris 4CA-16	17’-2”	16’-9”	16’-3”	15’-11”	15’-7”	15’-3”	15’-0”	14’-9”	14’-6”
2	Toris 4CA-20	15’-7”	14’-11”	14’-4”	13’-9”	13’-2”	12’-4”	11’-8”	11’-0”	10’-5”
	Toris 4CA-18	17’-10”	17’-0”	16’-4”	15’-9”	15’-2”	14’-8”	14’-3”	13’-10”	13’-6”
	Toris 4CA-16	19’-11”	19’-1”	18’-4”	17’-8”	17’-0”	16’-6”	16’-0”	15’-6”	15’-1”
3 or more	Toris 4CA-20	16’-2”	15’-5”	14’-10”	14’-3”	13’-9”	13’-4”	12’-11”	12’-6”	11’-10”
	Toris 4CA-18	18’-5”	17’-7”	16’-11”	16’-3”	15’-8”	15’-2”	14’-9”	14’-4”	13’-11”
	Toris 4CA-16	20’-2”	19’-7”	18’-11”	18’-3”	17’-7”	17’-1”	16’-6”	16’-1”	15’-8”

Notes for Tables 3.33 through 3.34

For SI: 1 inch = 25.4 mm, 1 foot = 304.8 mm, 1 psf = 4.88 kg/mm^2, 1 psi = 6.89 kPa, 1 pcf = 16.02 kg/m^3

1. Runways and planking shall be used for all concrete placement.
2. Slab weights are approximate, ± 1 psf, and include deck weight
3. The minimum bearing length is 1.5" at end supports and 4" at interior supports.
4. Construction live loads: Uniform = 20 psf, Concentrated = 150 lbs per foot of width
5. Values are based on LRFD design.
6. Overall slab depth refers to the nominal concrete depth measured from the top of the concrete to the bottom of the steel deck.

TABLE 3.33 - Epicore MSR Maximum Unshored Clear Spans (NWC = 150 pcf)

Span	Overall Slab Depth (in.)	4	4.5	5	5.5	6	6.5	7	7.5	8
	Slab Weight (pcf)	50	57	63	69	75	82	88	94	100
	Deck Type									
Any	MSR-22	5'-0"	5'-0"	5'-0"	5'-0"	5'-0"	4'-6"	4'-6"	4'-6"	4'-6"
	MSR-20 (exposed ceiling)	5'-0"	5'-0"	5'-0"	4'-6"	4'-6"	4'-6"	4'-0"	4'-0"	4'-0"
	MSR-20 (covered by drawall)	6'-0"	6'-0"	5'-6"	5'-6"	5'-6"	5'-0"	5'-0"	5'-0"	5'-0"

TABLE 3.34 - Epicore MSR Maximum Unshored Clear Spans (LWC = 110 pcf)

Span	Overall Slab Depth (in.)	4	4.5	5	5.5	6	6.5	7	7.5	8
	Slab Weight (pcf)	38	42	47	51	56	61	65	70	74
	Deck Type									
Any	MSR-22	5'-0"	5'-0"	5'-0"	5'-0"	5'-0"	4'-6"	4'-6"	4'-6"	4'-6"
	MSR-20 (exposed ceiling)	5'-0"	5'-0"	5'-0"	4'-6"	4'-6"	4'-6"	4'-0"	4'-0"	4'-0"
	MSR-20 (covered by drawall)	6'-0"	6'-0"	5'-6"	5'-6"	5'-6"	5'-0"	5'-0"	5'-0"	5'-0"

Diaphragm Shear Strength and Stiffness

Diaphragm shear strength and stiffness shall be calculated in accordance with AISI S310-20. When connections to support steel are made through perforated (acoustic) material, the nominal shear strength, nominal tensile strength, and flexibility shall be as given in Tables 4.1 through 4.3 of this report. The presence of wind uplift and the interaction between the shear strength and tensile strength of the connections shall be considered in accordance with AISI S310-20.

Notes for Tables 4.1 through 4.3

For SI: 1 lbf = 1.448 N, 1 in. = 25.4 mm

1. The minimum structural steel support thickness is 3/8 inch.
2. Screws shall be installed directly through a perforation.
3. The minimum edge distance and spacing of all connections are determined in accordance with AISI S100-20.

Table 4.1 - Shear Strength of Connections Through Perforated Material

Fastener	Deck Gage	P_{nf} (lbs)	Individual		Diaphragms			
					Load Type			
					Wind		Earthquake or Other	
			Ω (ASD)	φ (LRFD)	Ω (ASD)	φ (LRFD)	Ω (ASD)	φ (LRFD)
Simpson X Screw (#12 Screw)	20	1264	2.56	0.63	2.56	0.63	2.56	0.63
	18	1627	2.42	0.66	2.42	0.66	2.42	0.66
	16	2246	2.42	0.66	2.42	0.66	2.42	0.66
	14	2496	2.71	0.59	2.71	0.69	2.71	0.59
Simpson XL Screw	20	1259	2.42	0.66	2.42	0.66	2.42	0.66
	18	1647	2.42	0.66	2.42	0.66	2.42	0.66
	16	2289	2.42	0.66	2.42	0.66	2.42	0.66
	14	2674	2.71	0.59	2.71	0.59	2.71	0.59
Hilti ENP-19-L 15 PAF	20	1278	2.42	0.66	2.42	0.66	2.42	0.66
	18	1506	2.42	0.66	2.42	0.66	2.42	0.66
	16	2038	2.42	0.66	2.42	0.66	2.42	0.66
	14	2712	2.71	0.59	2.71	0.59	2.71	0.59
Hilti X-HSN 24 PAF	20	1125	2.49	0.64	2.49	0.64	2.49	0.64
	18	1451	2.42	0.66	2.42	0.66	2.42	0.66
	16	1839	2.55	0.63	2.55	0.63	2.55	0.63
	14	2666	2.71	0.59	2.71	0.59	2.71	0.59
¾” Visible Diameter Puddle Weld	20	1540	2.63	0.61	2.63	0.61	3.00	0.55
	18	2231	2.42	0.66	2.42	0.66	3.00	0.55
	16	2851	2.42	0.66	2.42	0.66	3.00	0.55
	14	3582	2.71	0.59	2.71	0.59	3.00	0.55

TABLE 4.2 - Tension Strength of Connections Through Perforated Material

Fastener	Deck Gage	P_{nt} (lbs)	Individual		Diaphragms	
			Ω (ASD)	Φ (LRFD)	Ω (ASD)	Φ (LRFD)
Simpson X Screw (#12 Screw)	20	1501	2.42	0.66	Per AISI S310-20 Table B1.1	
	18	1729	2.42	0.66		
	16	1947	2.45	0.65		
	14	2657	3.30	0.48		
Simpson XL Screw	20	1018	2.45	0.65		
	18	1297	2.42	0.66		
	16	1850	2.49	0.64		
	14	2415	2.84	0.56		
Hilti ENP-19-L 15 PAF	20	1063	3.21	0.50		
	18	1563	3.11	0.51		
	16	1879	2.45	0.65		
	14	1879	2.45	0.65		
Hilti X-HSN 24 PAF	20	1160	2.92	0.55		
	18	1186	2.87	0.56		
	16	1332	2.44	0.65		
	14	1816	3.78	0.42		
¾” Visible Diameter Puddle Weld	20	992	4.43	0.36		
	18	2431	3.49	0.46		
	16	2914	3.34	0.48		
	14	3131	3.90	0.41		

TABLE 4.3 - Flexibility of Connections Through Perforated Material

Fastener	Gage	Flexibility (in./kip)
Simpson X Screw (#12 Screw)	20	0.0832
	18	0.0669
	16	0.0647
	14	0.0555
Simpson XL Screw	20	0.0898
	18	0.0728
	16	0.0655
	14	0.0670
Hilti ENP-19-L 15 PAF	20	0.1019
	18	0.0797
	16	0.0717
	14	0.0619
Hilti X-HSN 24 PAF	20	0.1304
	18	0.0808
	16	0.0724
	14	0.0659
¾” Visible Diameter Puddle Weld	20	0.0829
	18	0.0617
	16	0.0474
	14	0.0421

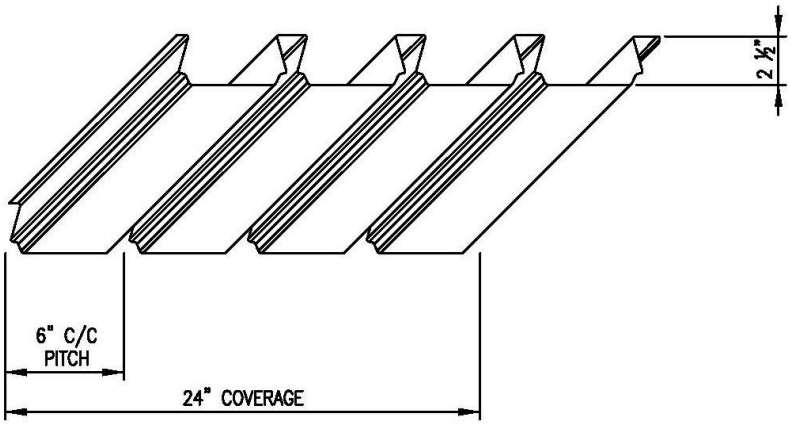

FIGURE 1.1 – PROFILE DIMENSIONS FOR TORIS, TORIS A, TORIS C, AND TORIS CA DECK
(CONCRETE COVER NOT SHOWN FOR TORIS C AND TORIS CA DECK)

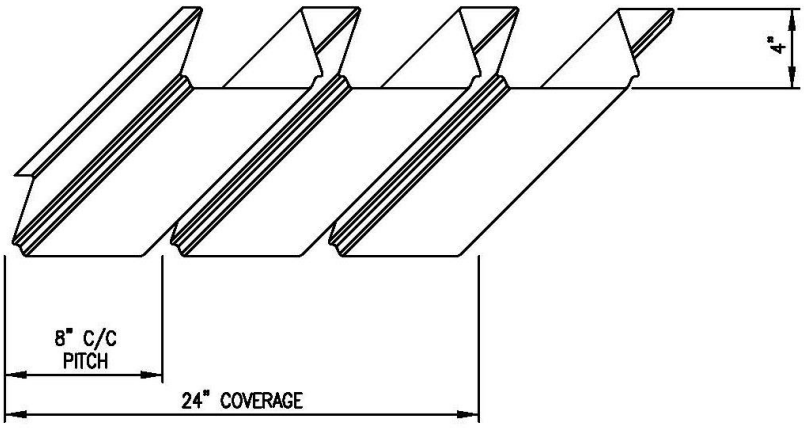

FIGURE 1.2 – PROFILE DIMENSIONS FOR TORIS4, TORIS 4A, TORIS 4C, AND TORIS 4CA DECK
(CONCRETE COVER NOT SHOW FOR TORIS 4C AND TORIS 4CA DECK)

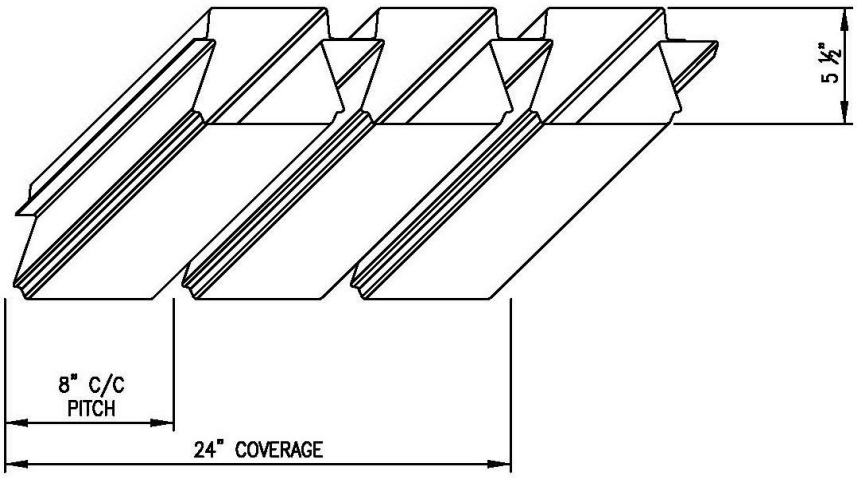

FIGURE 1.3 – PROFILE DIMENSIONS FOR TORIS 5.5 AND TORIS 5.5A DECK

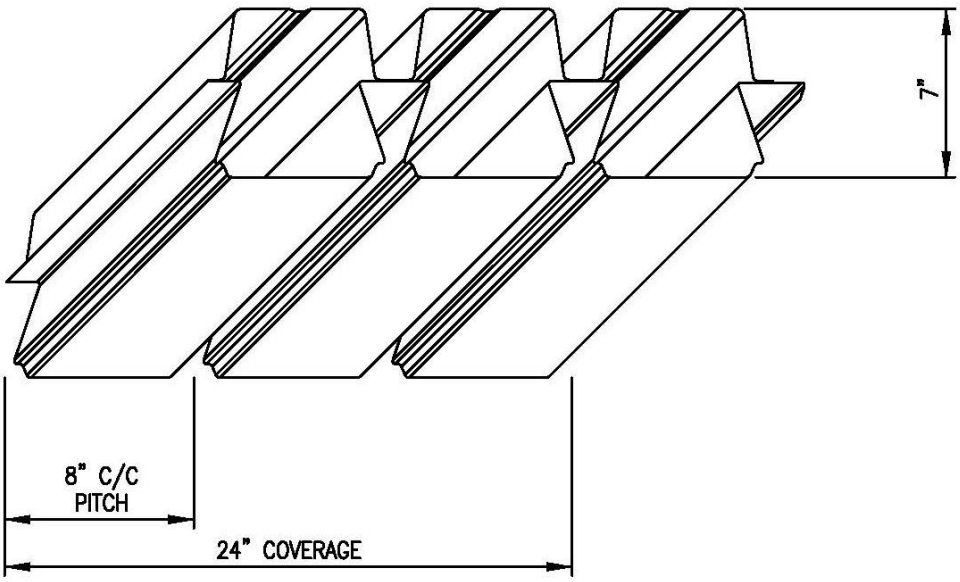

FIGURE 1.4 – PROFILE DIMENSIONS FOR TORIS 7 AND TORIS 7A DECK

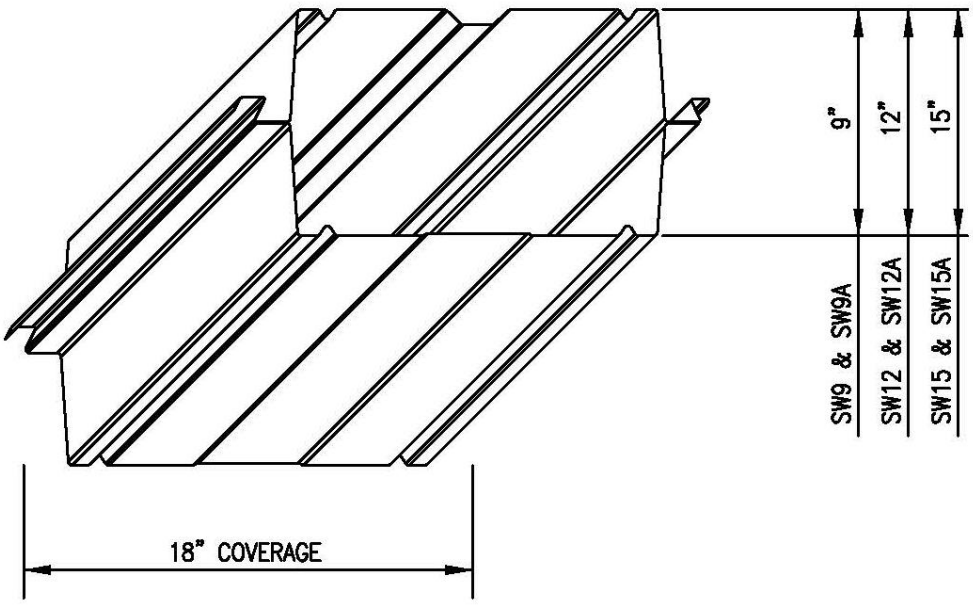

FIGURE 1.5 – PROFILE DIMENSIONS FOR SW9, SW9A, SW12, SW12A, SW15 AND SW12A DECK

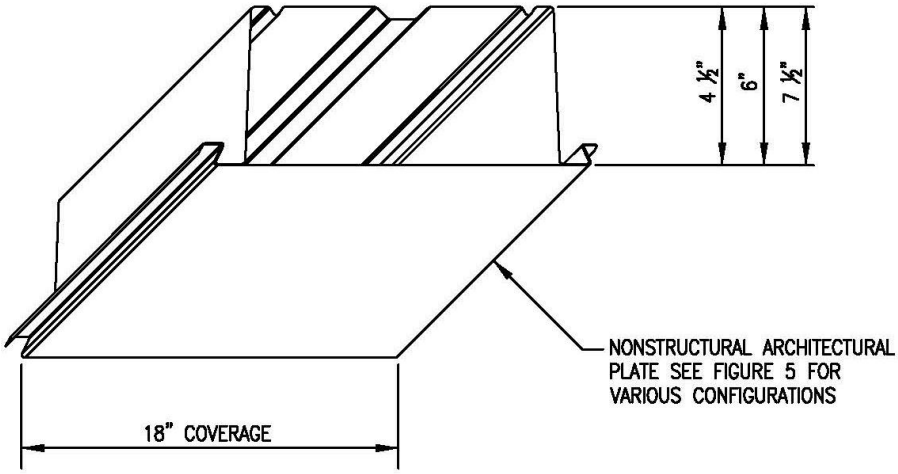

FIGURE 1.6 – PROFILE DIMENSIONS FOR ENVISTA 4.5, ENVISTA 4.5A, ENVISTA 6.0, ENVISTA 6.0A, ENVISTA 7.5, AND ENVISTA 7.5A DECK

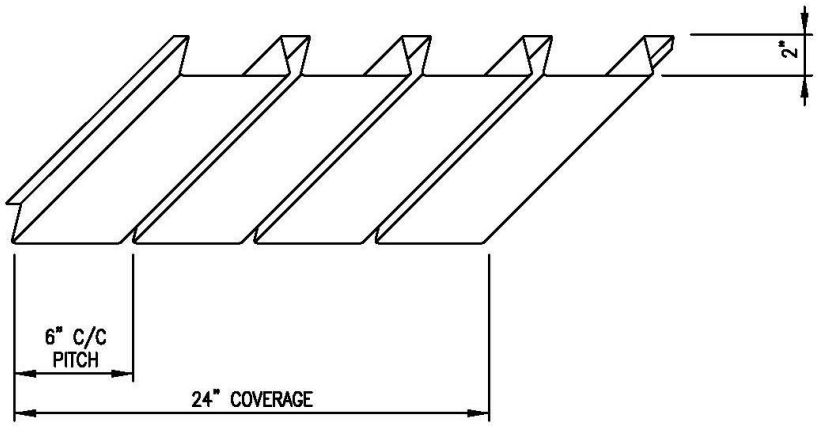

FIGURE 1.7 – PROFILE DIMENSIONS FOR ER2R, ER2RA, EPICORE, AND EPICORE A DECK (CONCRETE COVER NOT SHOWN FOR EPICORE AND EPICORE A DECK)

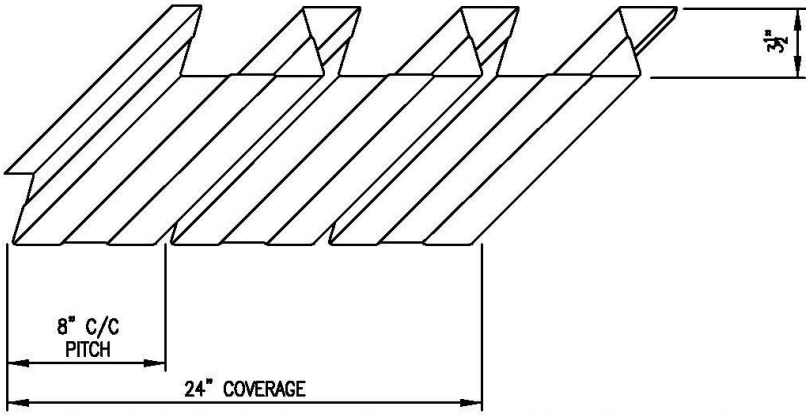

FIGURE 1.8 – PROFILE DIMENSIONS FOR ER3.5, ER3.5A, EPICORE 3.5, AND EPICORE 3.5A DECK (CONCRETE COVER NOT SHOWN FOR EPICORE 3.5 AND EPICORE 3.5A DECK)

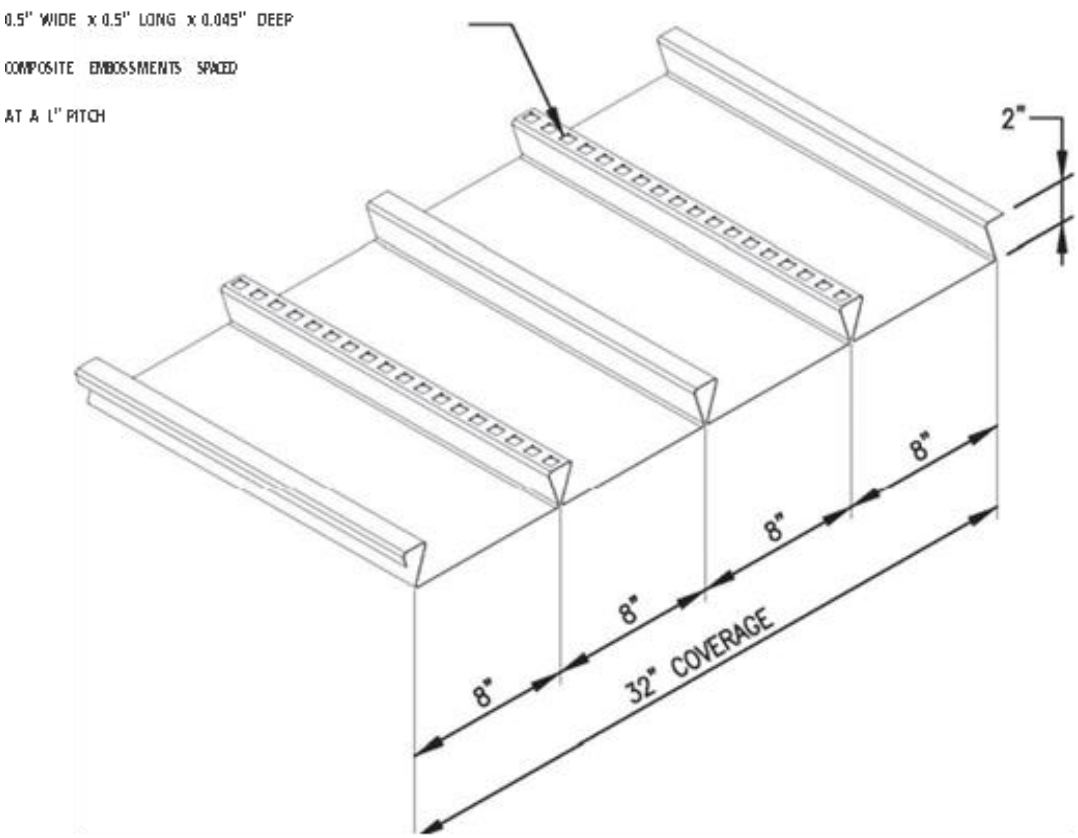

FIGURE 1.9 - PROFILE DIMENSIONS FOR EPICORE MSR (CONCRETE COVER NOT SHOWN)

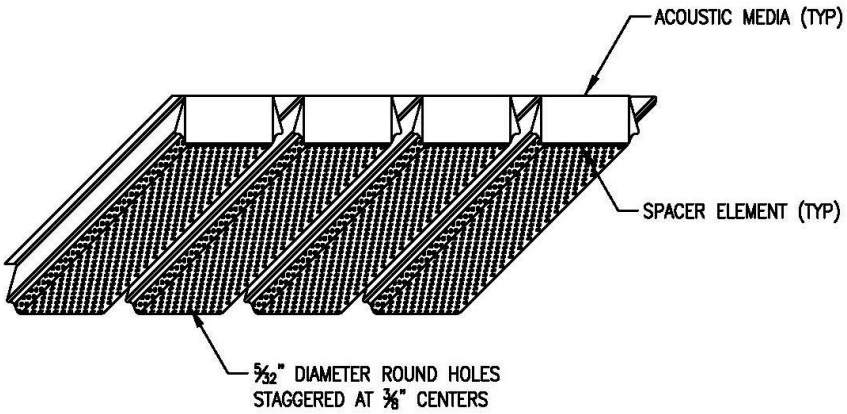

FIGURE 2.1 – PERFORATION PATTERN FOR TORIS A DECK

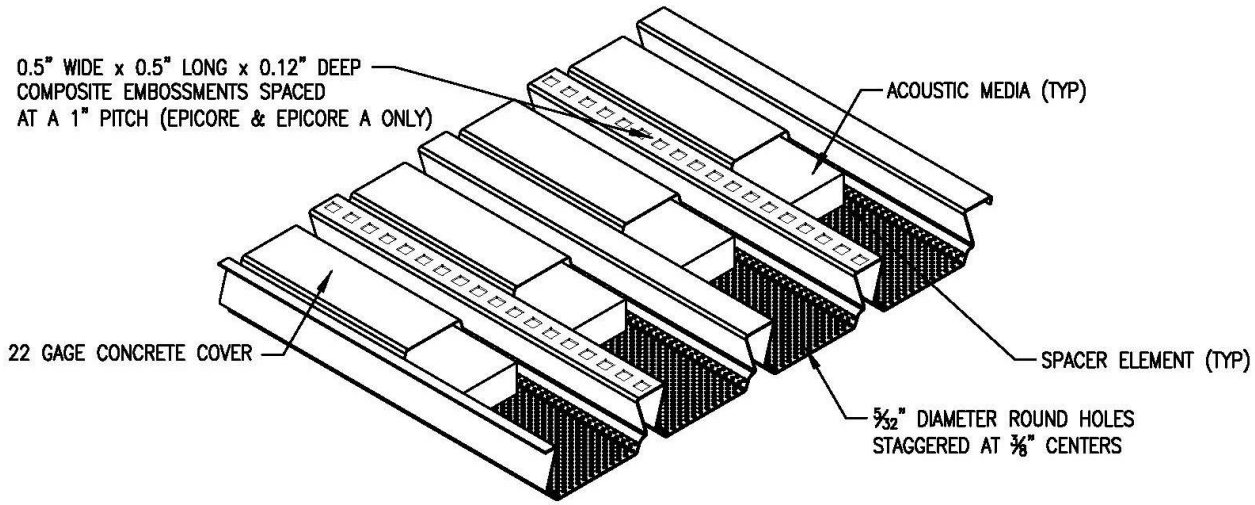

FIGURE 2.2 – PERFORATION PATTERN FOR TORIS CA DECK

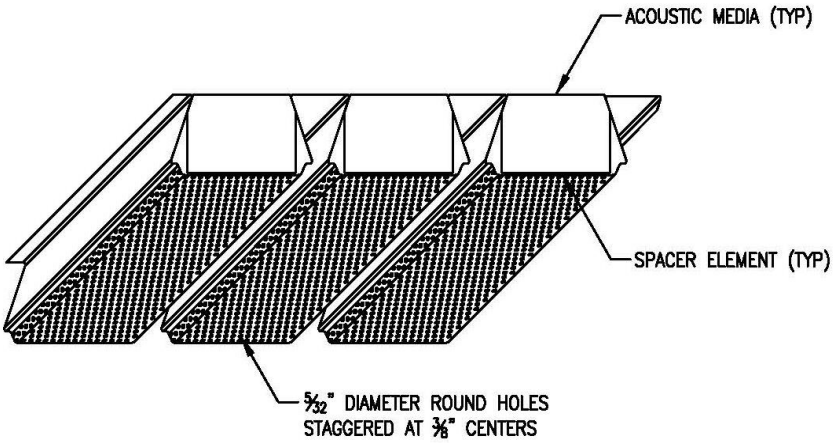

FIGURE 2.3 – PERFORATION PATTERN FOR TORIS 4A DECK

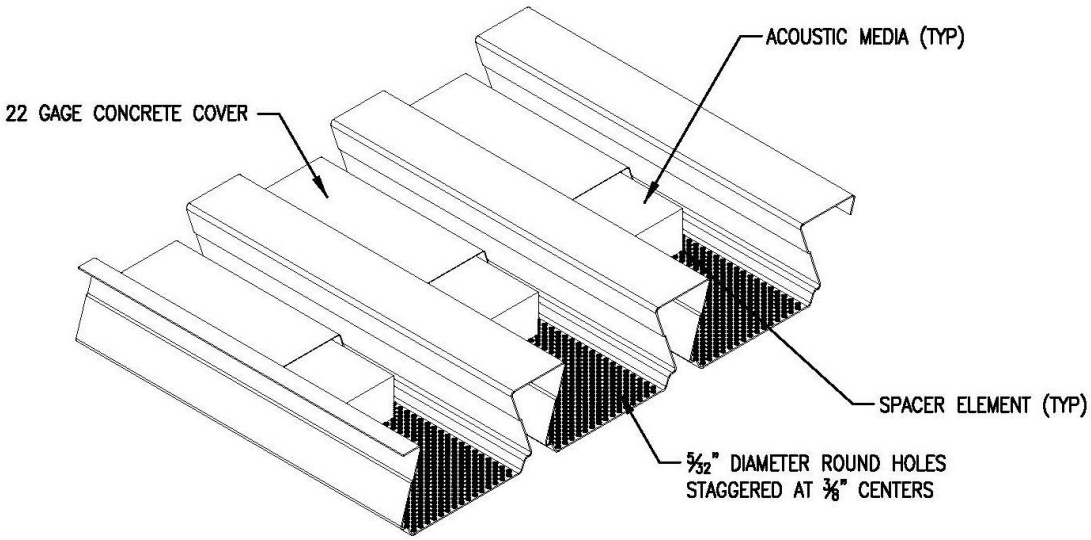

FIGURE 2.4 – PERFORATION PATTERN FOR TORIS 4CA DECK

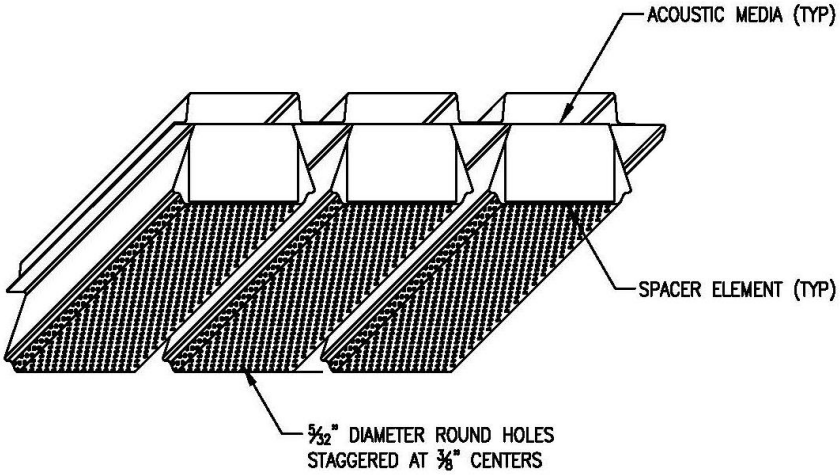

FIGURE 2.5 – PERFORATION PATTERN FOR TORIS 5.5A DECK

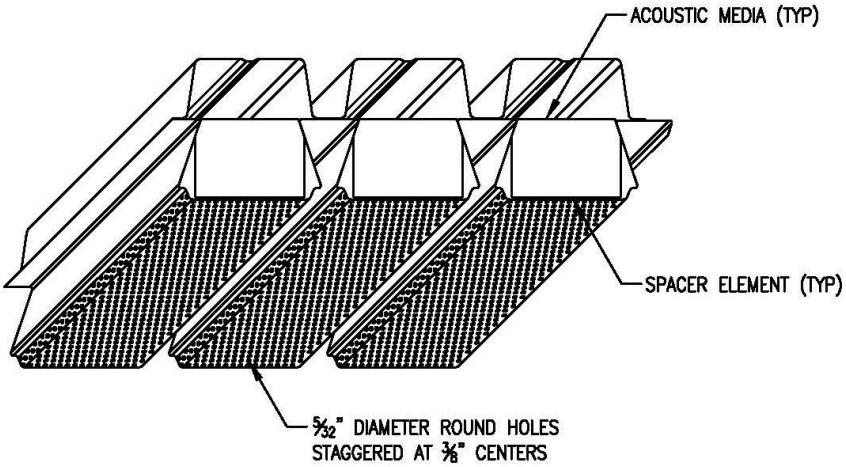

FIGURE 2.6 – PERFORATION PATTERN FOR TORIS 7A DECK

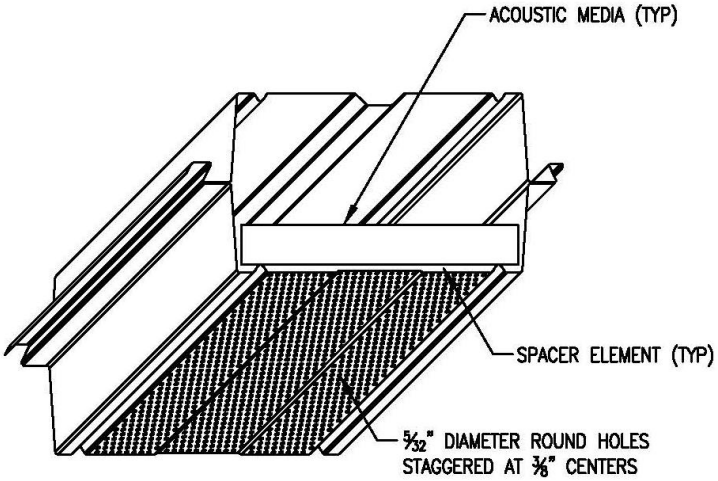

FIGURE 2.7 – PERFORATION PATTERN FOR SW9A, SW12A, AND SW15A DECK

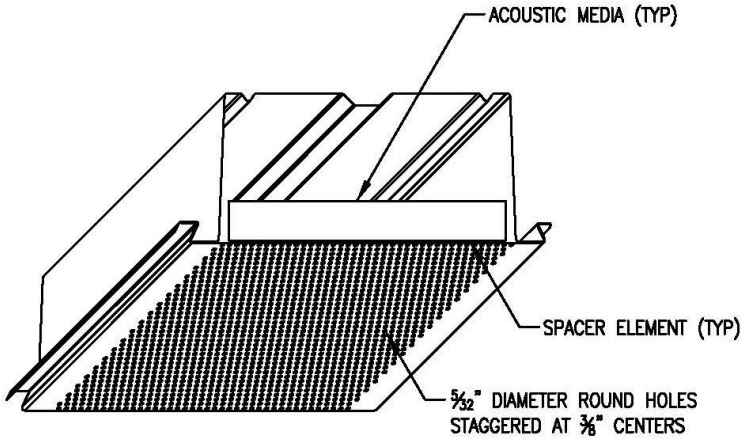

FIGURE 2.8 – PERFORATION PATTERN FOR ENVISTA 4.5A, ENVISTA 6.0A, AND ENVISTA 7.5A DECK

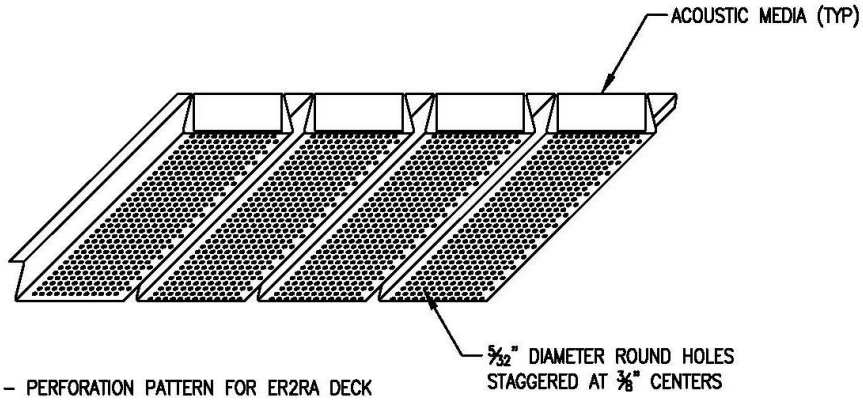

FIGURE 2.9 – PERFORATION PATTERN FOR ER2RA DECK

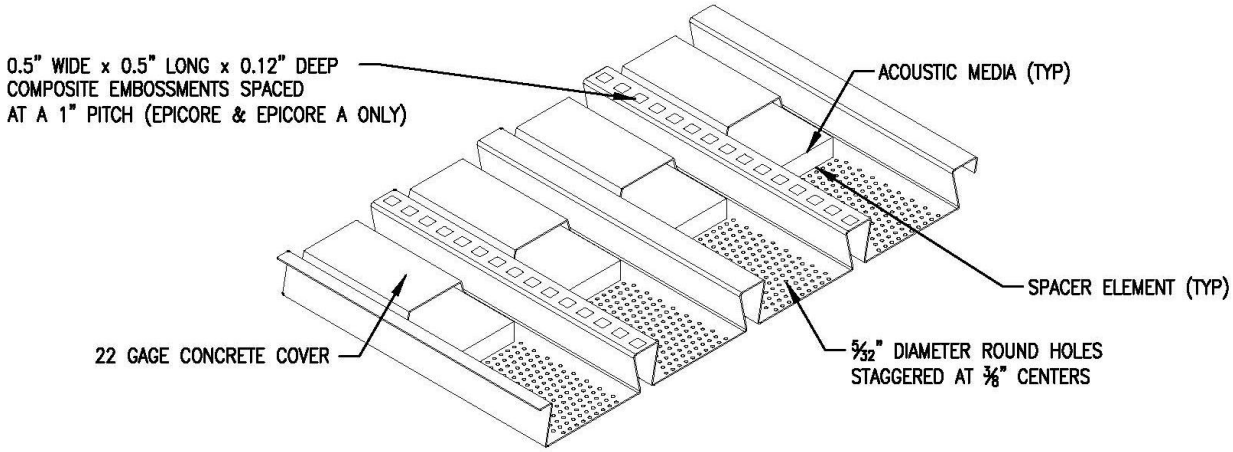

FIGURE 2.10 – PERFORATION PATTERN FOR EPCIORE A DECK

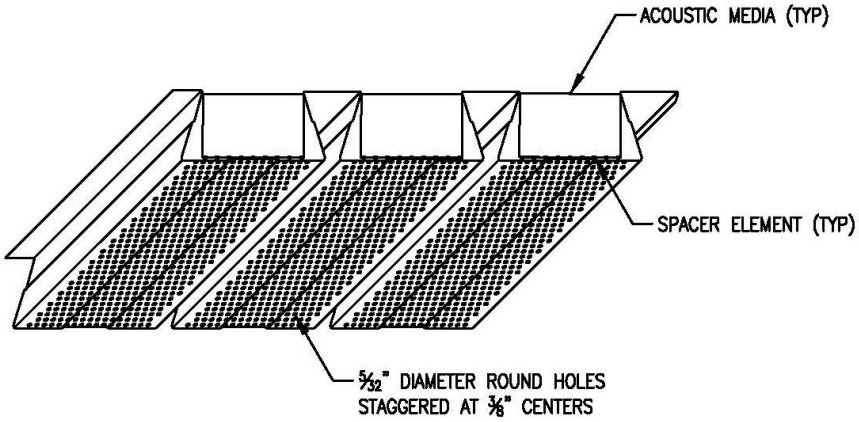

FIGURE 2.11 – PERFORATION PATTERN FOR ER3.5A DECK

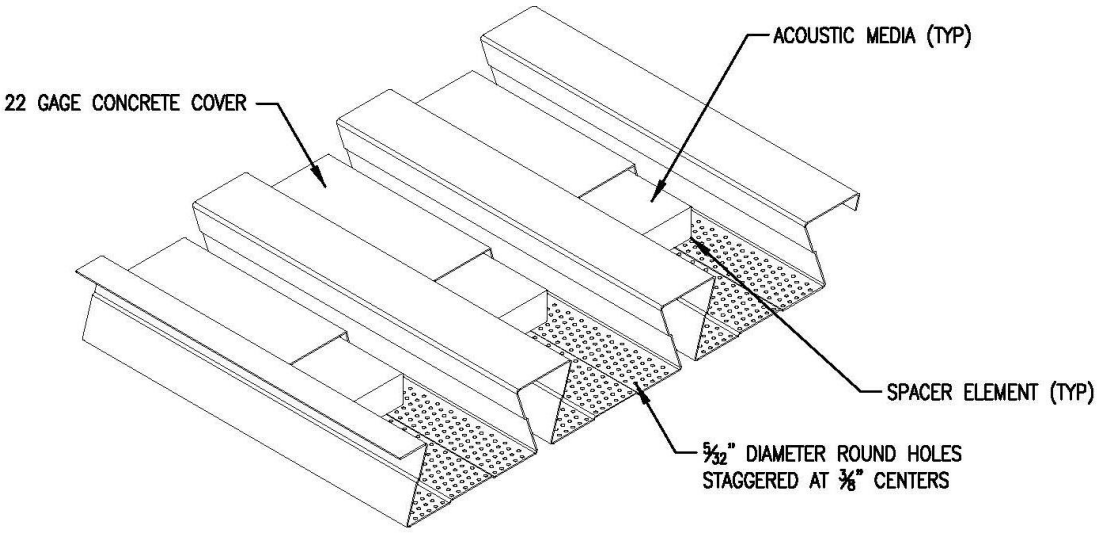

FIGURE 2.12 – PERFORATION PATTERN FOR EPICORE 3.5A DECK

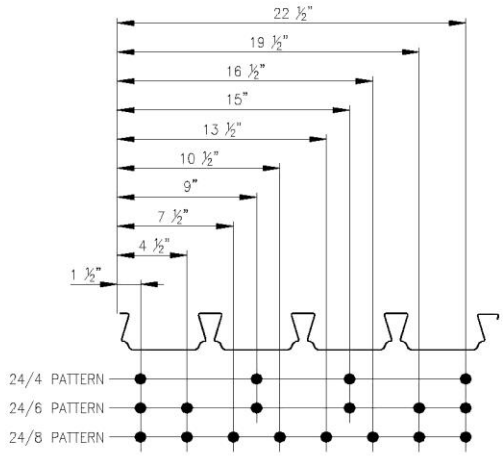

FIGURE 3.1 - END AND INTERIOR WELD PATTERNS FOR TORIS AND TORIS A DECK (INCHES)

PERIMETER / INTERMEDIATE CONNECTIONS:

THE SPACING, "e", OF CONNECTIONS FOR ATTACHING THE ROOF DECK TO PERIMETER OR PARALLEL SUPPORT ELEMENTS MUST BE DETERMINED USING THE FOLLOWING EQUATION:

$e < Qf / S$

LRFD: $e < Qf / Su$ IF REQUIRED STRENGTH, Su, IS LESS THAN THE FACTORED STRENGTH

OR

ASD: $e < Qf / \Omega\ Su$ IF REQUIRED STRENGTH, Su, IS LESS THAN THE ALLOWABLE STRENGTH.

WHERE, Qf = NOMINAL CONNECTION SHEAR STRENGTH
S = NOMINAL SHEAR STRENGTH OF DIAPHRAGM
Su = REQUIRED SHEAR STRENGTH OF DIAPHRAGM
e = CONNECTION SPACING, (INCHES)

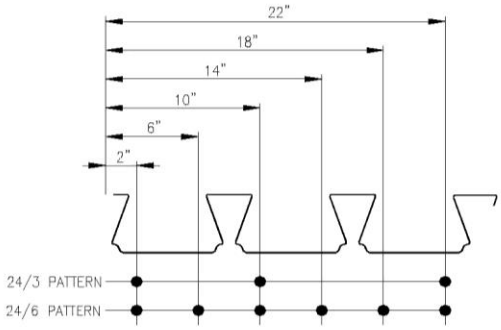

FIGURE 3.2 - END AND INTERIOR WELD PATTERNS FOR TORIS 4 AND TORIS 4A DECK (INCHES)

PERIMETER / INTERMEDIATE CONNECTIONS:

THE SPACING, "e", OF CONNECTIONS FOR ATTACHING THE ROOF DECK TO PERIMETER OR PARALLEL SUPPORT ELEMENTS MUST BE DETERMINED USING THE FOLLOWING EQUATION:

$e < Qf / S$

LRFD: $e < Qf / Su$ IF REQUIRED STRENGTH, Su, IS LESS THAN THE FACTORED STRENGTH

OR

ASD: $e < Qf / \Omega\ Su$ IF REQUIRED STRENGTH, Su, IS LESS THAN THE ALLOWABLE STRENGTH.

WHERE, Qf = NOMINAL CONNECTION SHEAR STRENGTH
S = NOMINAL SHEAR STRENGTH OF DIAPHRAGM
Su = REQUIRED SHEAR STRENGTH OF DIAPHRAGM
e = CONNECTION SPACING, (INCHES)

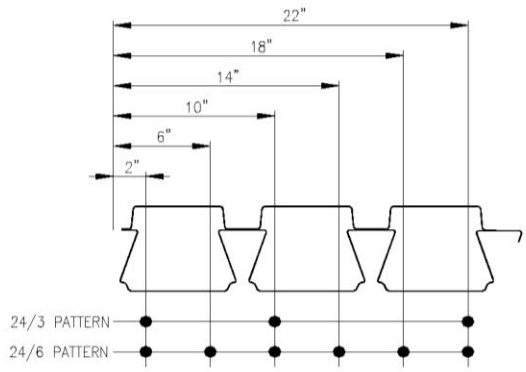

FIGURE 3.3 - END AND INTERIOR WELD PATTERNS FOR TORIS 5.5 AND TORIS 5.5A DECK (INCHES)

PERIMETER / INTERMEDIATE CONNECTIONS:

THE SPACING, "e", OF CONNECTIONS FOR ATTACHING THE ROOF DECK TO PERIMETER OR PARALLEL SUPPORT ELEMENTS MUST BE DETERMINED USING THE FOLLOWING EQUATION:

$e < Qf / S$

LRFD: $e < Qf / Su$ IF REQUIRED STRENGTH, Su, IS LESS THAN THE FACTORED STRENGTH

OR

ASD: $e < Qf / \Omega Su$ IF REQUIRED STRENGTH, Su, IS LESS THAN THE ALLOWABLE STRENGTH.

WHERE, Qf = NOMINAL CONNECTION SHEAR STRENGTH
S = NOMINAL SHEAR STRENGTH OF DIAPHRAGM
Su = REQUIRED SHEAR STRENGTH OF DIAPHRAGM
e = CONNECTION SPACING, (INCHES)

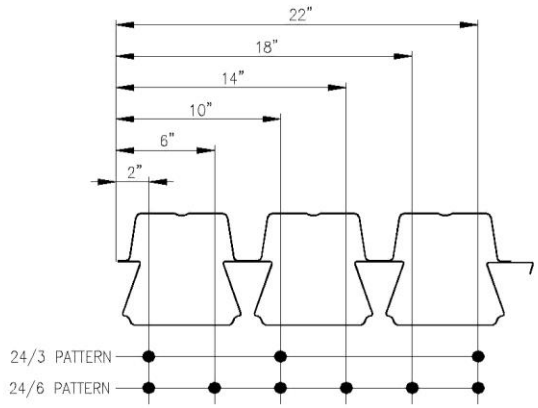

FIGURE 3.4 - END AND INTERIOR WELD PATTERNS FOR TORIS 7 AND TORIS 7A DECK (INCHES)

PERIMETER / INTERMEDIATE CONNECTIONS:

THE SPACING, "e", OF CONNECTIONS FOR ATTACHING THE ROOF DECK TO PERIMETER OR PARALLEL SUPPORT ELEMENTS MUST BE DETERMINED USING THE FOLLOWING EQUATION:

$e < Qf / S$

LRFD: $e < Qf / Su$ IF REQUIRED STRENGTH, Su, IS LESS THAN THE FACTORED STRENGTH

OR

ASD: $e < Qf / \Omega Su$ IF REQUIRED STRENGTH, Su, IS LESS THAN THE ALLOWABLE STRENGTH.

WHERE, Qf = NOMINAL CONNECTION SHEAR STRENGTH
S = NOMINAL SHEAR STRENGTH OF DIAPHRAGM
Su = REQUIRED SHEAR STRENGTH OF DIAPHRAGM
e = CONNECTION SPACING, (INCHES)

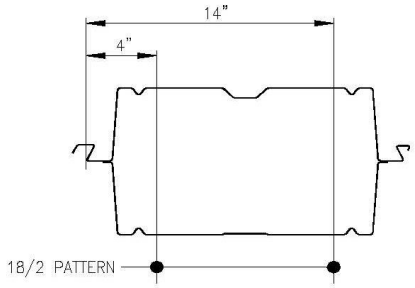

FIGURE 3.5 - END AND INTERIOR WELD PATTERNS FOR SW9, SW9A, SW12, SW12A, SW15 AND SW15A DECK (INCHES)

PERIMETER / INTERMEDIATE CONNECTIONS:

THE SPACING, "e", OF CONNECTIONS FOR ATTACHING THE ROOF DECK TO PERIMETER OR PARALLEL SUPPORT ELEMENTS MUST BE DETERMINED USING THE FOLLOWING EQUATION:

$e < Qf / S$

LRFD: $e < Qf / Su$ IF REQUIRED STRENGTH, Su, IS LESS THAN THE FACTORED STRENGTH

OR

ASD: $e < Qf / \Omega Su$ IF REQUIRED STRENGTH, Su, IS LESS THAN THE ALLOWABLE STRENGTH.

WHERE, Qf = NOMINAL CONNECTION SHEAR STRENGTH
S = NOMINAL SHEAR STRENGTH OF DIAPHRAGM
Su = REQUIRED SHEAR STRENGTH OF DIAPHRAGM
e = CONNECTION SPACING, (INCHES)

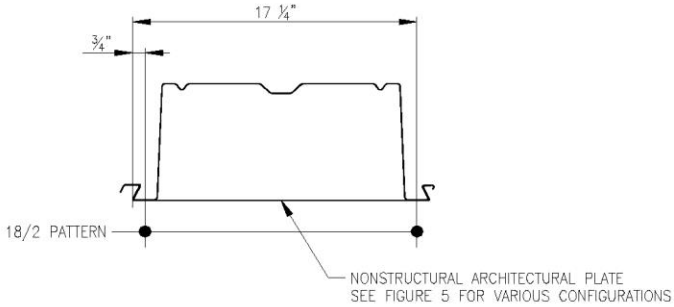

FIGURE 3.6 - END AND INTERIOR WELD PATTERNS FOR Envista 4.5, Envista 4.5A Envista 6.0, Envista 6.0A, Envista 7.5 AND Envista 7.5A DECK (INCHES)

PERIMETER / INTERMEDIATE CONNECTIONS:

THE SPACING, "e", OF CONNECTIONS FOR ATTACHING THE ROOF DECK TO PERIMETER OR PARALLEL SUPPORT ELEMENTS MUST BE DETERMINED USING THE FOLLOWING EQUATION:

$e < Qf / S$

LRFD: $e < Qf / Su$ IF REQUIRED STRENGTH, Su, IS LESS THAN THE FACTORED STRENGTH

OR

ASD: $e < Qf / \Omega Su$ IF REQUIRED STRENGTH, Su, IS LESS THAN THE ALLOWABLE STRENGTH.

WHERE, Qf = NOMINAL CONNECTION SHEAR STRENGTH
S = NOMINAL SHEAR STRENGTH OF DIAPHRAGM
Su = REQUIRED SHEAR STRENGTH OF DIAPHRAGM
e = CONNECTION SPACING, (INCHES)

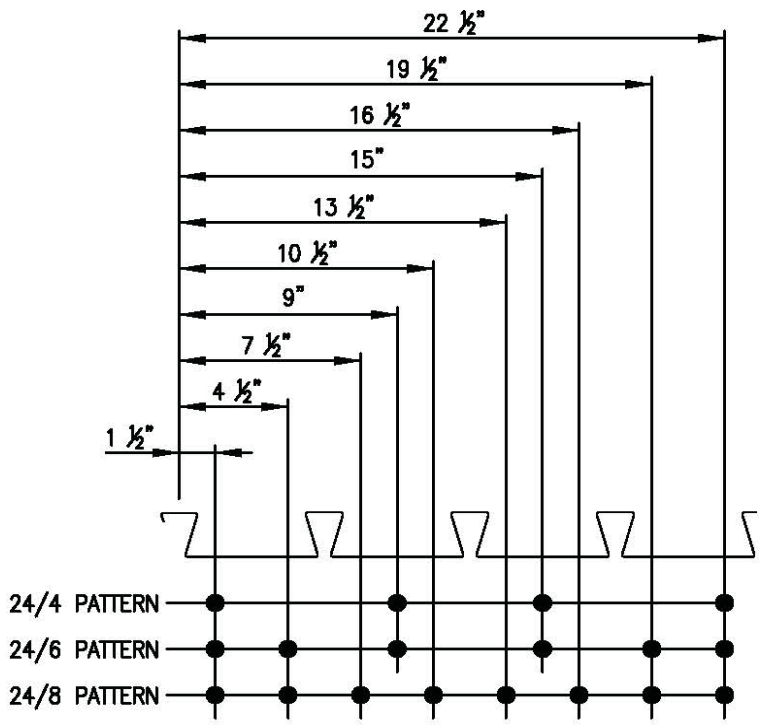

FIGURE 3.7 - END AND INTERIOR CONNECTION PATTERNS FOR EPICORE, ER2R AND ER2RA DECK (INCHES)

PERIMETER / INTERMEDIATE CONNECTIONS:

THE SPACING, "e", OF CONNECTIONS FOR ATTACHING THE ROOF DECK TO PERIMETER OR PARALLEL SUPPORT ELEMENTS SHALL BE DETERMINED USING THE FOLLOWING EQUATION:

$e < Q_f / S$

LRFD: $e < \phi Q_f / S_u$ IF REQUIRED STRENGTH, S_u, IS LESS THAN THE FACTORED STRENGTH OR,

ASD: $e < Q_f / \Omega S_u$ IF REQUIRED STRENGTH, S_u, IS LESS THAN THE ALLOWABLE STRENGTH.

WHERE: Q_f = NOMINAL CONNECTION SHEAR STRENGTH
S = NOMINAL SHEAR STRENGTH OF DIAPHRAGM
S_u = REQUIRED SHEAR STRENGTH OF DIAPHRAGM e
= CONNECTION SPACING, (INCHES)

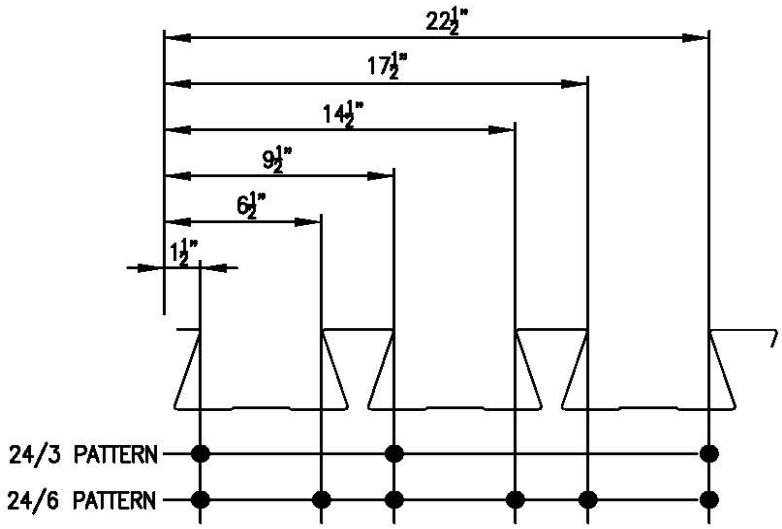

FIGURE 3.8 - END AND INTERIOR CONNECTION PATTERNS FOR ER3.5 AND ER3.5A DECK (INCHES)

PERIMETER / INTERMEDIATE CONNECTIONS:

THE SPACING, "e", OF CONNECTIONS FOR ATTACHING THE ROOF DECK TO PERIMETER OR PARALLEL SUPPORT ELEMENTS SHALL BE DETERMINED USING THE FOLLOWING EQUATION:

$e < Q_f / S$

LRFD: $e < \phi Q_f / S_u$ IF REQUIRED STRENGTH, S_u, IS LESS THAN THE FACTORED STRENGTH, OR

ASD: $e < Q_f / \Omega S_u$ IF REQUIRED STRENGTH, S_u, IS LESS THAN THE ALLOWABLE STRENGTH.

WHERE: Q_f = NOMINAL CONNECTION SHEAR STRENGTH
S = NOMINAL SHEAR STRENGTH OF DIAPHRAGM
S_u = REQUIRED SHEAR STRENGTH OF DIAPHRAGM e = CONNECTION SPACING, (INCHES)

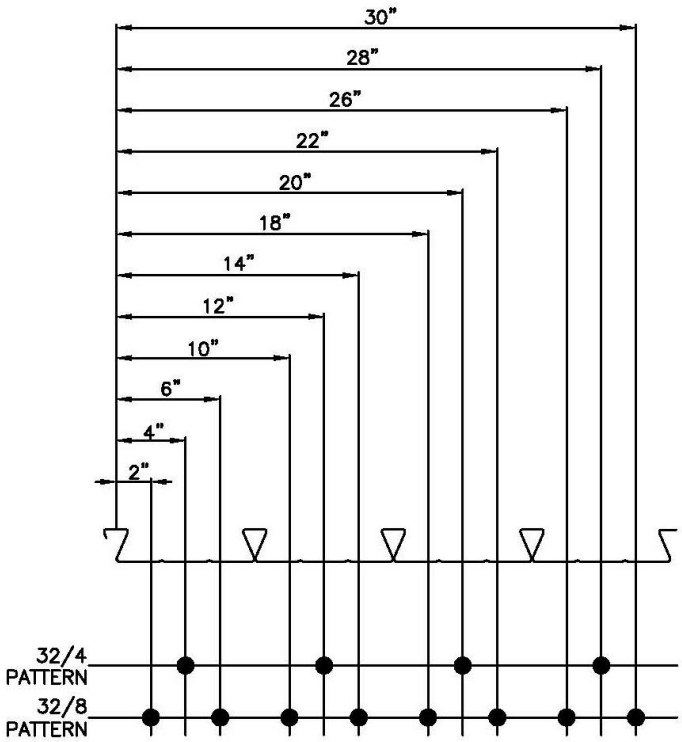

FIGURE 3.9 - END AND INTERIOR CONNECTION PATTERNS FOR EPICORE MSR DECK (INCHES)

PERIMETER / INTERMEDIATE CONNECTIONS:

THE SPACING, "e", OF CONNECTIONS FOR ATTACHING THE ROOF DECK TO PERIMETER OR PARALLEL SUPPORT ELEMENTS SHALL BE DETERMINED USING THE FOLLOWING EQUATION:

$e < Q_f / S$

LRFD: $e < \phi Q_f / S_u$ IF REQUIRED STRENGTH, S_u, IS LESS THAN THE FACTORED STRENGTH, OR

ASD: $e < Q_f / \Omega S_u$ IF REQUIRED STRENGTH, S_u, IS LESS THAN THE ALLOWABLE STRENGTH.

WHERE: Q_f = NOMINAL CONNECTION SHEAR STRENGTH
S = NOMINAL SHEAR STRENGTH OF DIAPHRAGM
S_u = REQUIRED SHEAR STRENGTH OF DIAPHRAGM e = CONNECTION SPACING, (INCHES)

TABLE 5 – Design Tension (Pull-Out) Strengths for Epic Hangers for use with Steel Roof Deck

Deck Type	Deck Gage No.	Anchor Type	Design Tension (Pull-Out) Strengths				Fire Sprinkler Support with Rivets	
			Without Rivets		With Rivets			
			LRFD ϕP_n (lbs)	ASD P_n/Ω (lbs)	LRFD ϕP_n (lbs)	ASD P_n/Ω (lbs)	Max. Pipe Dia. (in.)	Rod Dia. (in.)
ER2R/ER2RA	20	38WB250	130	81	481	300	3	⅜
	18		222	139	634	396	4	⅜
	16		353	221	865	541	4	⅜
ER3.5/ER3.5A	20	ANK38	168	105	698	436	4	⅜
	18		252	157	1,357	848	4	⅜
	16		346	216	2,180	1,362	4	⅜
ER5/ER5A	20	ANK38	168	105	698	436	4	⅜
	18		252	157	1,357	848	4	⅜
	16		346	216	2,180	1,362	4	⅜
ER6.5/ER6.5A	20	ANK38	168	105	698	436	4	⅜
	18		252	157	1,357	848	4	⅜
	16		346	216	2,180	1,362	4	⅜
Toris/Toris A	20	38WB250	130	81	481	300	3	⅜
	18		222	139	634	396	4	⅜
	16		353	221	865	541	4	⅜
Toris 4/Toris 4A	20	ANK38	168	105	698	436	4	⅜
	18		252	157	1,357	848	4	⅜
	16		346	216	2,180	1,362	4	⅜
Toris 5.5/Toris 5.5A	20	ANK38	168	105	698	436	4	⅜
	18		252	157	1,357	848	4	⅜
	16		346	216	2,180	1,362	4	⅜
Toris 7/Toris 7A	20	ANK38	168	105	698	436	4	⅜
	18		252	157	1,357	848	4	⅜
	16		346	216	2,180	1,362	4	⅜

For SI: 1 inch = 25.4 mm, 1 lb. = 4.448 N

Notes:

1. Resistance Factors, ϕ, and Safety Factors, Ω, have been calculated in accordance with AISI S100-16 or --16 (2020) w/S2-20 Chapter K.
2. The structural design professional is responsible for ensuring the additional point loads do not exceed the load-carrying capacity of the roof deck.
3. The hangers are limited to static vertical tension loading only.
4. For installations without rivets, where hanger spacing is less than 24 inches along the same rib, the total load to all hangers shall be less than or equal to a single hanger design strength.
5. Installation details are provided in Section 4.3.2 and Figures 7, 8, and 9 of this report.
6. Sprinkler pipe installations shall comply with NFPA 13.
7. The ER5/ER5A and ER6.5/ER6.5A are beyond the scope of this report and evidence of code compliance shall be provided to the building official for approval.
8. When the fastening system includes rivets, panels shall be covered with a code-complying roof covering.

TABLE 6 – Design Tension (Pull-Out) Strengths for Epic Hangers for use with Concrete-Filled Steel Deck

Deck Type	Deck Gage	Anchor Type	Minimum Normal Weight Concrete Compressive Strength (psi)	Minimum Concrete Slab Thickness (in)	Design Tension (Pull-Out) Strengths		Sprinkler Supports	
					LRFD	ASD		
					ϕPn (lbs)	P_n/Ω (lbs)	Max. Pipe Dia. (in)	Rod Dia. (in)
2.0 Epicore	20	38WB250	3,000	4	2,291	1,432	8	⅜
	18						8	⅜
	16						8	⅜
2.0 Epicore A	20	38WB250	3,000	4	838	524	6	⅜
	18						6	⅜
	16						6	⅜
3.5 Epicore	20	ANK38	3,000	5.5	2,440	1,525	4	⅜
	18						4	⅜
	16						4	⅜
3.5 Epicore A	20	ANK38	3,000	5.5	1,633	1,021	4	⅜
	18						4	⅜
	16						4	⅜
Toris C	20	38WB250	3,000	4.5	2,291	1,432	8	⅜
	18						8	⅜
	16						8	⅜
Toris CA	20	38WB250	3,000	4.5	838	524	6	⅜
	18						6	⅜
	16						6	⅜
Toris 4C	20	ANK38	3,000	6	2,440	1,525	4	⅜
	18						4	⅜
	16						4	⅜
Toris 4CA	20	ANK38	3,000	6	1,633	1,021	4	⅜
	18						4	⅜
	16						4	⅜

For SI: 1 inch = 25.4 mm, 1 lb. = 4.448 N

Notes:

1. Resistance Factors, ϕ, and Safety Factors, Ω, have been calculated in accordance with AISI S100-16 or -16 (2020) w/S2-20 Chapter K.
2. The structural design professional is responsible for ensuring the additional point loads do not exceed the load-carrying capacity of the roof deck.
3. The hangers are limited to static vertical tension loading only.
4. For installations without rivets, where hanger spacing is less than 24 inches along the same rib, the total load to all hangers shall be less than or equal to a single hanger design strength.
5. Installation details are provided in Section 4.3.2 and Figures 10 and 11 of this report.
6. Sprinkler pipe installations shall comply with NFPA 13.
7. Use with pipe diameters exceeding 4"requires ½" threaded rod and ⅜" to ½" diameter increaser coupling nut.

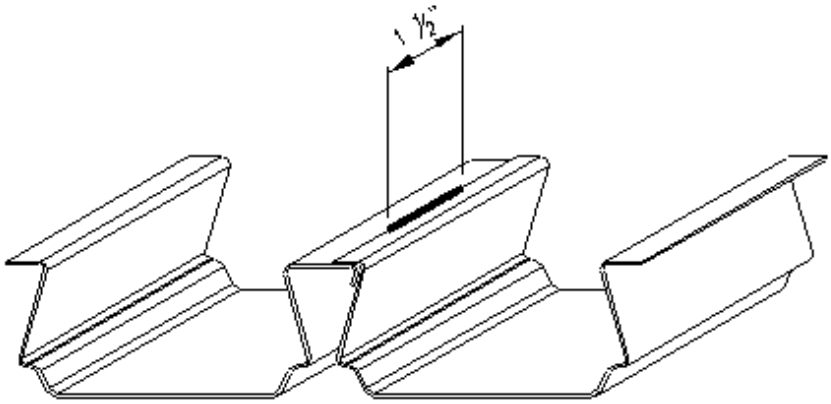

FIGURE 4.1a - WELDED SIDE LAP DETAIL FOR TORIS AND TORIS A DECK
(1 1/2" LONG FILLET WELD AT SIDE LAP)

FIGURE 4.1b - SCREWED SIDE LAP DETAIL FOR TORIS AND TORIS A DECK
(#12 SCREW TYPE FASTENER AT SIDE LAP)

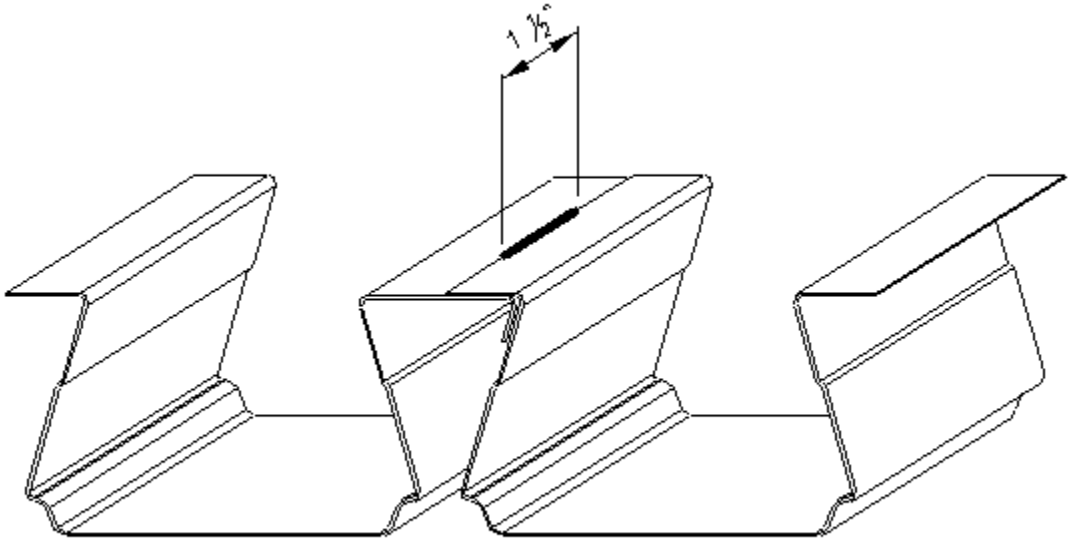

FIGURE 4.2a - WELDED SIDE LAP DETAIL FOR TORIS 4 AND TORIS 4A DECK
(1 1/2" LONG FILLET WELD AT SIDE LAP)

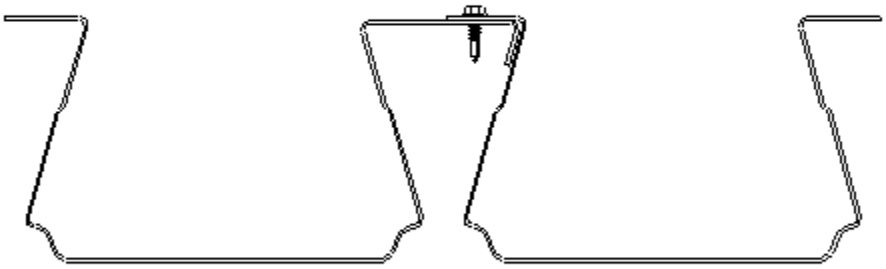

FIGURE 4.2b - SCREWED SIDE LAP DETAIL FOR TORIS 4 AND TORIS 4A DECK
(#12 SCREW TYPE FASTENER AT SIDE LAP)

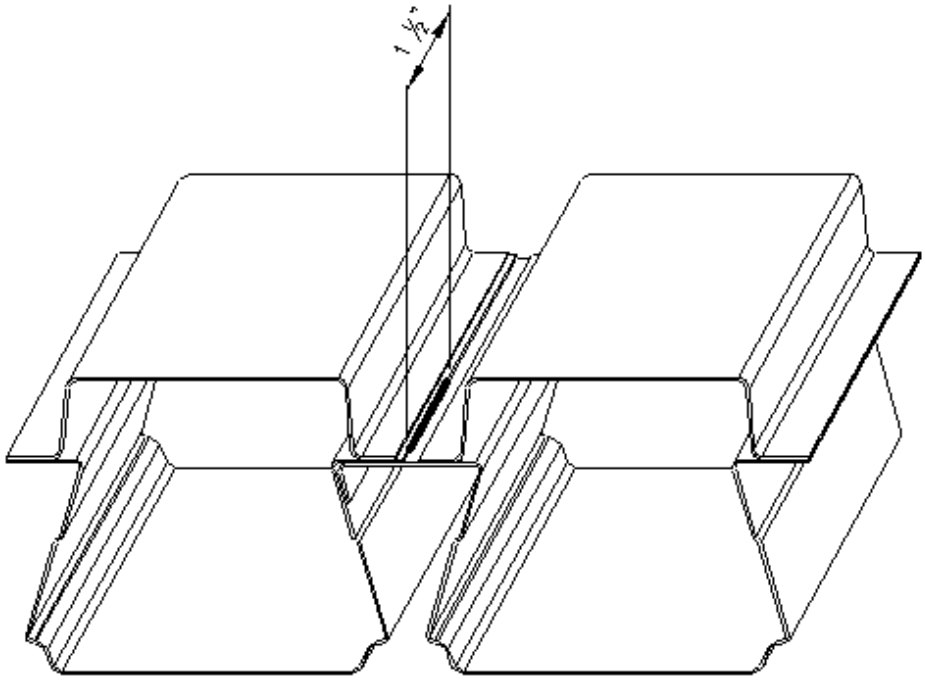

FIGURE 4.3a - WELDED SIDE LAP DETAIL FOR TORIS 5 AND TORIS 5A DECK
(1 1/2" LONG FILLET WELD AT SIDE LAP)

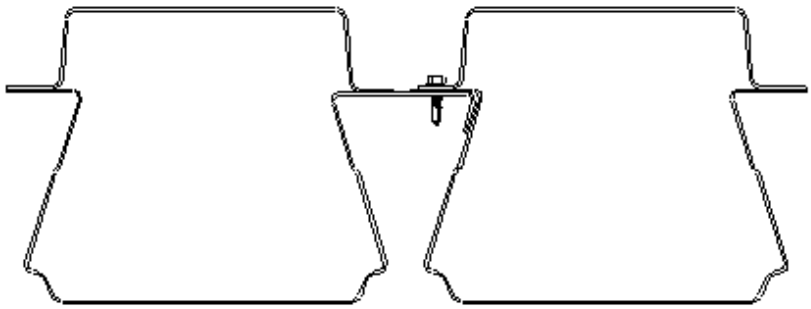

FIGURE 4.3b - SCREWED SIDE LAP DETAIL FOR TORIS 5.5 AND TORIS 5.5A DECK
(#12 SCREW TYPE FASTENER AT SIDE LAP)

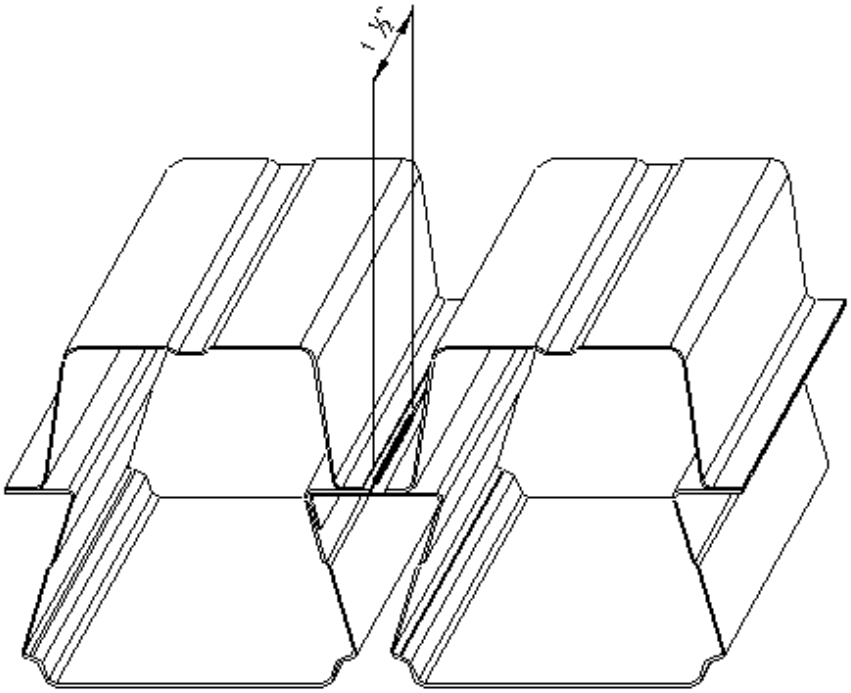

FIGURE 4.4a - WELDED SIDE LAP DETAIL FOR TORIS 7 AND TORIS 7A DECK
(1 1/2" LONG FILLET WELD AT SIDE LAP)

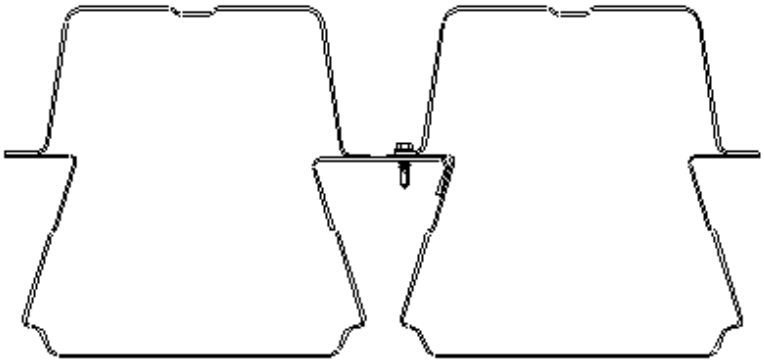

FIGURE 4.4b - SCREWED SIDE LAP DETAIL FOR TORIS 7 AND TORIS 7A DECK
(#12 SCREW TYPE FASTENER AT SIDE LAP)

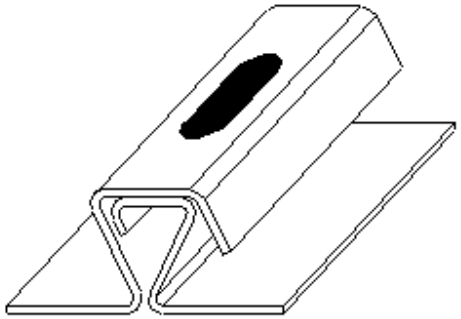

FIGURE 4.4c – WELDED SIDE LAP DETAIL FOR SW, SWA, Envista AND Envista-A DECK (3/8" x 1" LONG ARC SEAM WELD AT SIDE LAP)

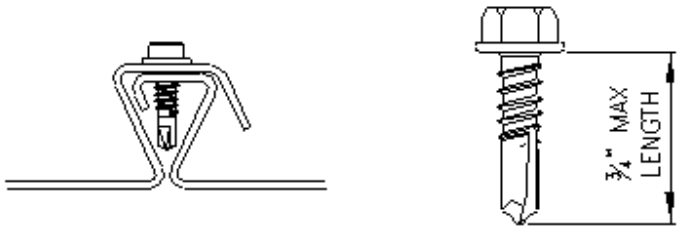

FIGURE 4.4d – SCREWED SIDE LAP DETAIL FOR SW, SWA, Envista AND Envista-A DECK (#12 SCREW TYPE FASTENER AT SIDE LAP)

ENVISTA - NO PLATE

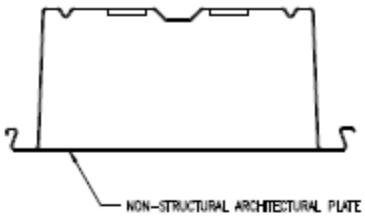

ENVISTA-F & ENVISTA-FA (ACOUSTIC VERSION)

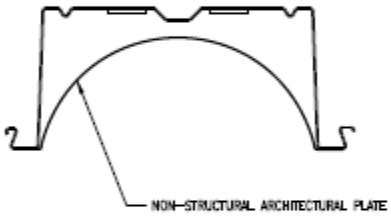

ENVISTA-U & ENVISTA-UA (ACOUSTIC VERSION)

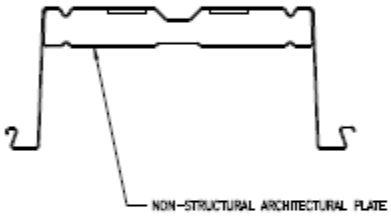

ENVISTA-WHF & ENVISTA-WHFA (ACOUSTIC VERSION)

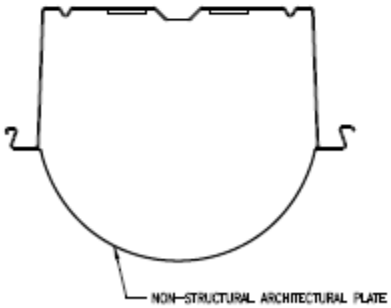

ENVISTA-D & ENVISTA-DA (ACOUSTIC VERSION)

FIGURE 5 - ENVISTA WITH VARIOUS CONFIGURATIONS OF THE NON-STRUCTURAL ARCHITECTURAL PLATE

Ankore Hanger Wedge Bolt

FIGURE 6 – Deck Underside Fastening Devices

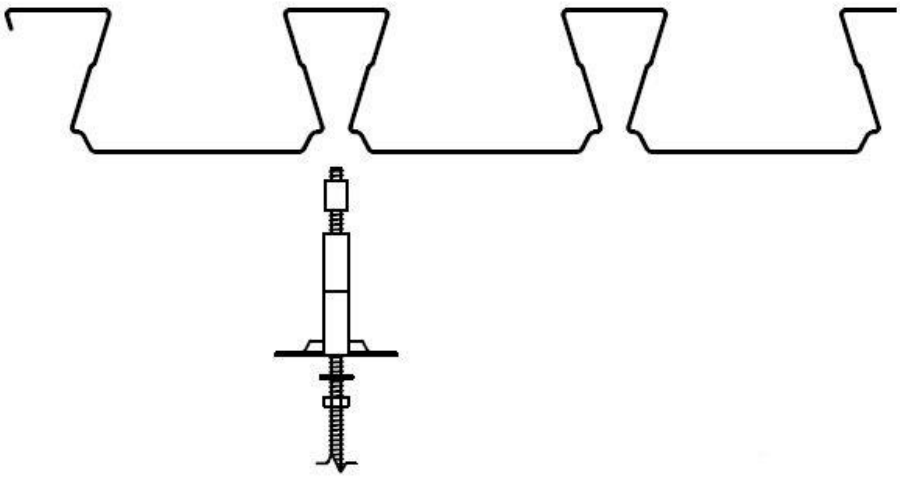

Placement

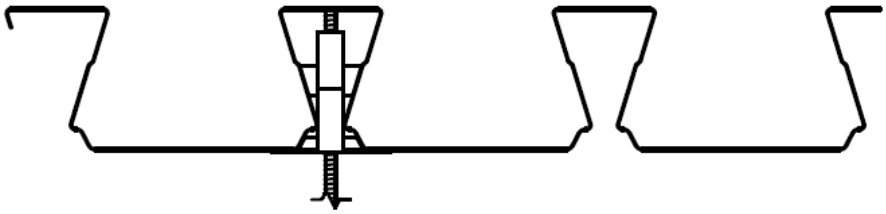

Final Installation

FIGURE 7 – Ankore Hanger Installation Details for Roof Deck

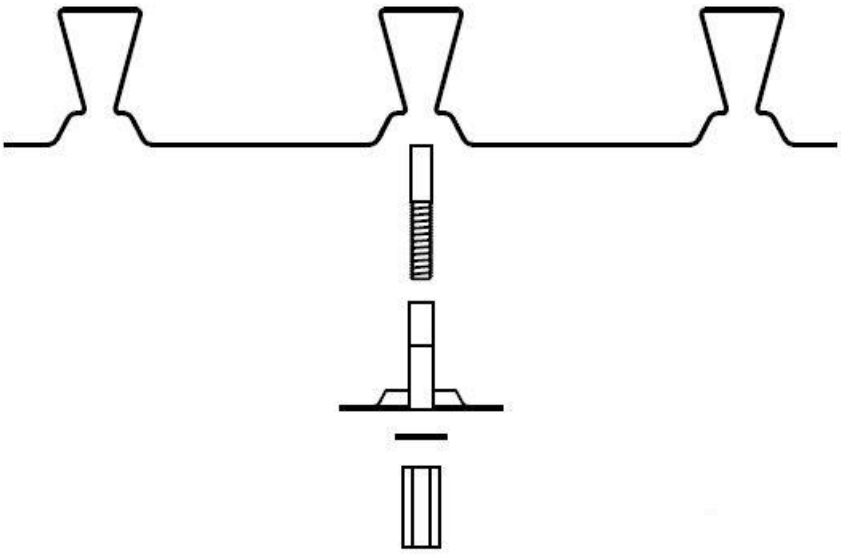

Placement

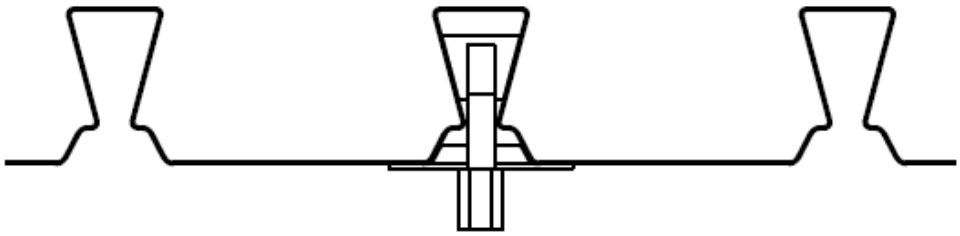

Final Installation

FIGURE 8 – Wedge Bolt Hanger Installation Details for Roof Deck

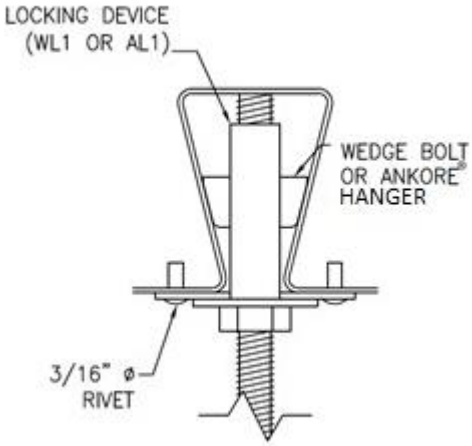

FIGURE 9 – Typical Roof Deck Installation with Rivets

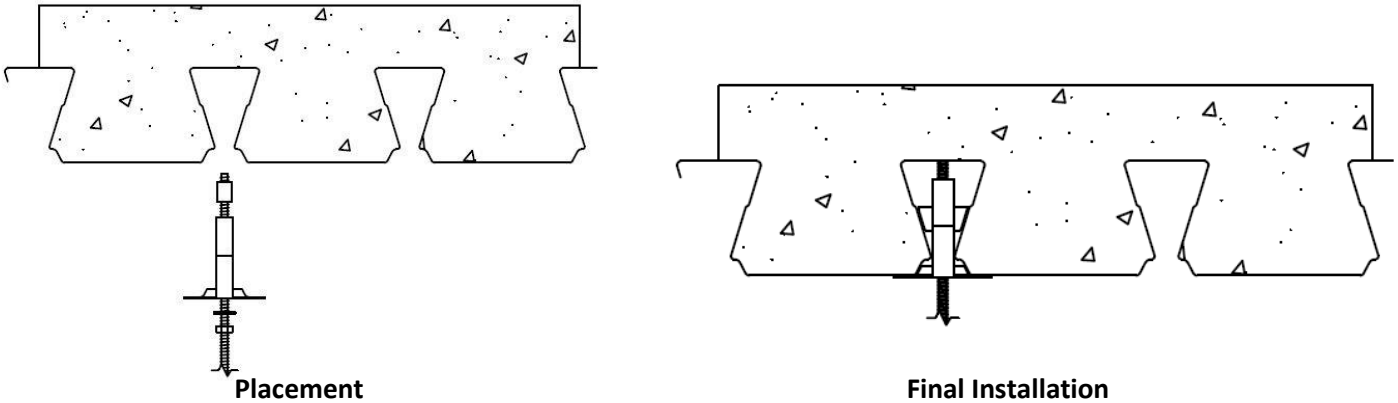

Placement Final Installation

FIGURE 10 – Ankore Hanger Installation Details for Floor Deck

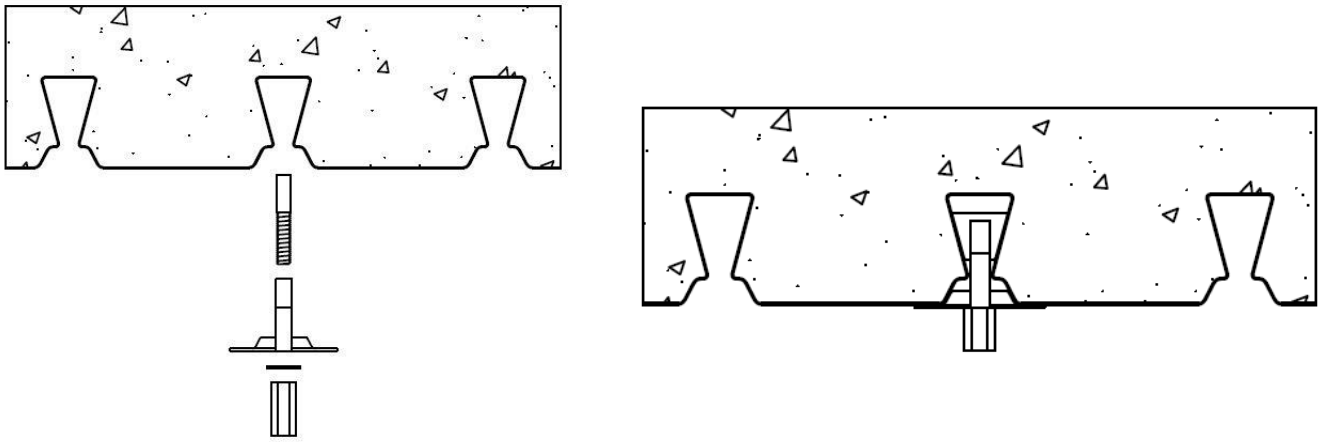

Placement Final Installation

FIGURE 11 – Wedge Bolt Hanger Installation Details for Floor Deck

CALIFORNIA SUPPLEMENT

EPIC METALS CORPORATION
11 Talbot Avenue
Rankin, Pennsylvania 15104
412-351-3913
www.epicmetals.com

STEEL ROOF DECK OR FORM DECK AND DECK FASTENING SYSTEMS

CSI Sections: 05 05 23 Metal Fastenings
05 31 00 Steel Decking

1.0 SCOPE OF EVALUATION

1.1 Compliance with the following codes

- 2022 California Building Code (CBC)
- 2022 California Residential Code (CRC)

2.0 RECOGNITION

Epic steel roof deck or form deck and deck fastening systems evaluated in IAPMO UES ER-226 comply with the CBC and CRC, subject to the additional requirements in Section 3.0 of this supplement.

3.0 ADDITIONAL REQUIREMENTS

3.1 The design, installation, conditions of use, and identification of the Epic Steel Roof Deck or Form Deck and Deck Fastening Systems shall be in accordance with the 2021 International Building Code or the 2021 International Residential Code, as applicable, as noted in ER-226.

3.2 Design, installation, and inspection shall be in accordance with Chapters 16 and 17 of the CBC, or Chapters 16A and 17A, as applicable, due to local amendments to these chapters.

3.3 For structures regulated under CBC Chapter 16A, diaphragm span-depth ratios shall comply with Section 1604A.3.8.

3.4 Special Inspections shall be in accordance with CBC Sections 1705.2 and 1705A.2, Steel Construction, Sections 1705.3 and 1705A.3, Concrete Construction, Sections 1705.12 and 1705.12a, Wind Resistance, and Sections 1705.13 and 1705.13a, Seismic Resistance, as applicable.

3.5 Structural Observation shall be in accordance with CBC Sections 1704.6 and 1704A.6, as applicable.

3.6 Concrete tests and materials shall comply with CBC Section 1910A.

3.7 For structures regulated under CBC Chapter 22A, the minimum base steel thickness is 0.0359 inches (0.9 mm), except for single-story open structures, where the steel deck is not used as a diaphragm and there are no suspended hangers or bracing for nonstructural components attached to the deck.

3.8 This supplement expires concurrently with ER-226.

For additional information about this evaluation report please visit www.uniform-es.org or email us at info@uniform-es.org

LOS ANGELES SUPPLEMENT

EPIC METALS CORPORATION
11 Talbot Avenue
Rankin, Pennsylvania 15104
412-351-3913
www.epicmetals.com

STEEL ROOF DECK OR FORM DECK AND DECK FASTENING SYSTEMS

CSI Sections:
05 05 23 Metal Fastenings
05 31 00 Steel Decking

1.0 Scope of Evaluation

1.1 Compliance with the following codes

- 2023 City of Los Angeles Building Code (LABC)
- 2023 City of Los Angeles Residential Code (LARC)

2.0 RECOGNITION

Epic steel roof deck or form deck and deck fastening systems evaluated in IAPMO UES ER-226 and the ER-226 California Supplement comply with the LABC and LARC, subject to the additional requirements in Section 3.0 of this supplement.

3.0 ADDITIONAL REQUIREMENTS

3.1 The design, installation, conditions of use, and identification of the Epic Steel Roof Deck or Form Deck and Deck Fastening Systems shall be in accordance with California Supplement to ER-226, as applicable.

3.2 Design, installation, and inspection shall be in accordance with Chapters 16 and 17 of the LABC, as applicable, due to local amendments to these chapters.

3.3 Decks shall be welded by Los Angeles City certified light gage welders, who shall demonstrate to the Deputy Inspectors their ability to achieve satisfactory welding results. Samples simulating the steel decks welded to framing shall be prepared for inspection. A satisfactory weld is indicated by tearing of the deck material or displaying the proper weld fusion area as the sample is twisted.

3.4 Computations and details demonstrating that the loads applied to the decks comply with this report shall be submitted to the Department of Building and Safety for approval. The drawings shall include deck panel length and cross-section details; fastener and weld details at supports, diaphragm boundaries, shear transfer elements, and seams, where required; and design shears. In accordance with LABC Section 106.3.3.2 and LARC Section R301.1.3, the computations and details shall be prepared, stamped, and signed by a California registered design professional except as otherwise permitted by the Department of Building and Safety.

3.5 Mill certifications or test data shall be submitted to the Department of Building and Safety when requested to verify the deck material specifications.

3.6 Side Seam attachments, where required, shall not exceed the maximum spacing provisions in ER-226 nor shall the spacing be greater than 4 feet (1220 mm).

3.7 The ASTM A185/ASTM A1064 welded wire reinforcement shall be placed at the approximate mid-depth of the concrete fill. Corrosive admixtures such as those containing calcium chloride shall not be used in the concrete fill. Minimum 6 x 6 - W1.4 x W1.4 W.W.F. temperature reinforcement shall be provided 1 inch below the concrete surface. The reinforcing ratio shall be a minimum 0.001 each way.

3.8 The required number of "puddle welds" specified in the tables refers to each support. Arc spot welds for fastening steel sheets to supporting members for uplift shall be calculated in accordance with AISI S100 Section J2.2.3. The specified sizes of puddle welds refer to the fused sizes.

3.9 Composite Steel Floor Decks and Non-Composite Form Decks used in diaphragms at less than the full width shall be designed to transfer all shear loads.

3.10 Tabulated values for diaphragm shear shall not be increased by one-third for seismic or wind loading.

3.11 Use of the decks in fire-resistance-rated construction shall be in accordance with a separate Los Angeles City Research Report or IAPMO UES evaluation report.

3.12 This supplement expires concurrently with ER-226.

For additional information about this evaluation report please visit www.uniform-es.org or email us at info@uniform-es.org